**This electronic collection of documents is provided for the convenience of the user and is Not a Certified Document –**

**The documents contained herein were originally issued and sealed by the individuals whose names and license numbers appear on each page, on the dates appearing with their signature on that page.**
**This file or an individual page shall not be considered a certified document.**

DocuSign Envelope ID: 418405CB-B266-47A1-B979-D52A4F0F67C8

DocuSigned by: Jason Lawing
B53ABA2D65E1407...

09/08/99

# TIP PROJECT: 17BP.8.R.70

CONTRACT:

See Sheet 1-A For Index of Sheets

| STATE | STATE PROJECT REFERENCE NO. | SHEET NO. | TOTAL SHEETS |
|---|---|---|---|
| N.C. | 17BP.8.R.70 | 1 | |

| STATE PROJ. NO. | F. A. PROJ. NO. | DESCRIPTION |
|---|---|---|
| 17BP.8.R.70 | | PE |

STATE OF NORTH CAROLINA
DIVISION OF HIGHWAYS

# RANDOLPH COUNTY

***LOCATION: BRIDGE NO. 750212 ON SR 2896 (PICKETTS MILL ROAD) OVER RICHLAND CREEK***

***TYPE OF WORK: GRADING, DRAINAGE, PAVING and STRUCTURE***

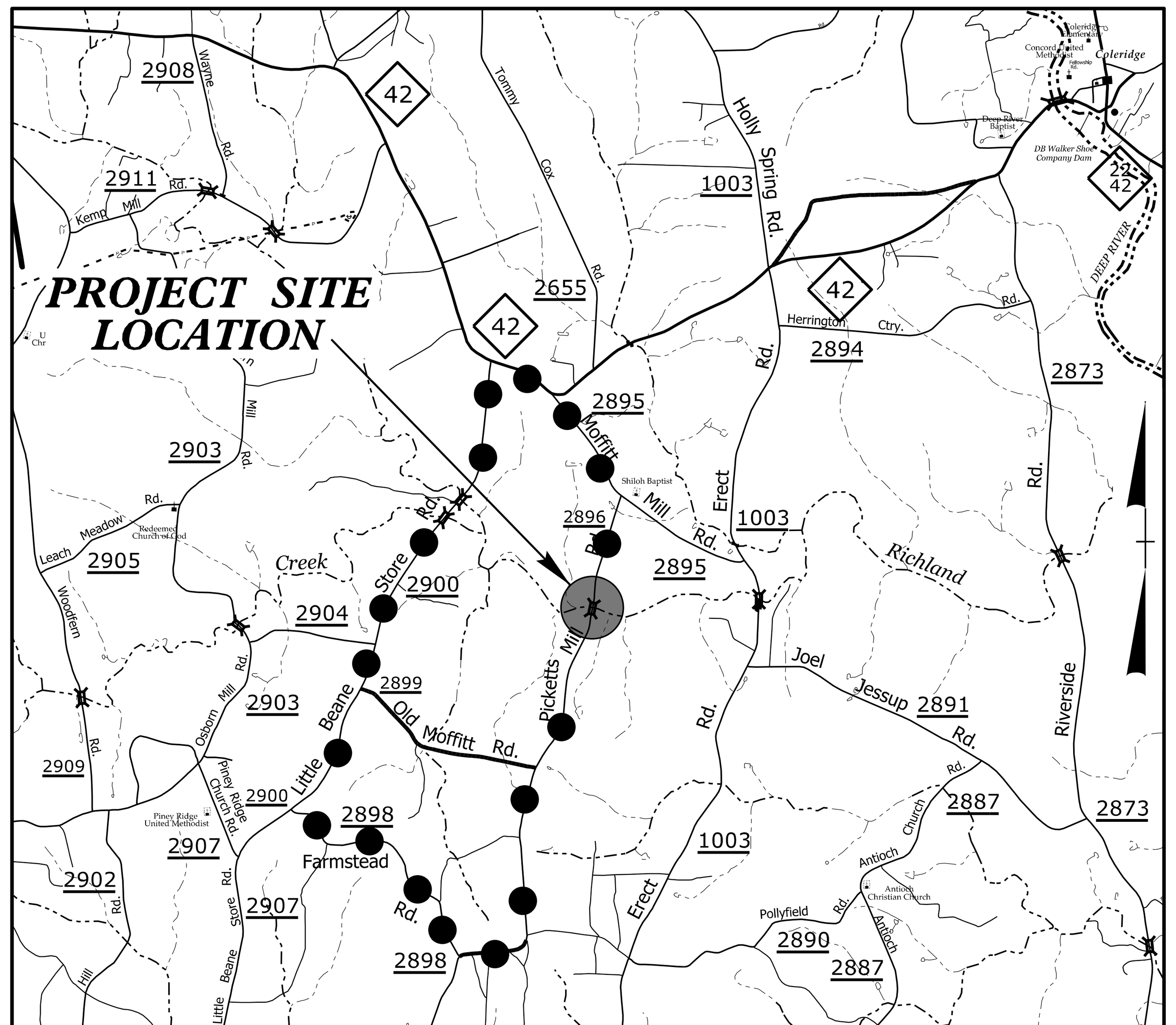


## VICINITY MAP

●—●—●—● OFF-SITE DETOUR ROUTE

N.T.S.

NAD 83/
NA 2011

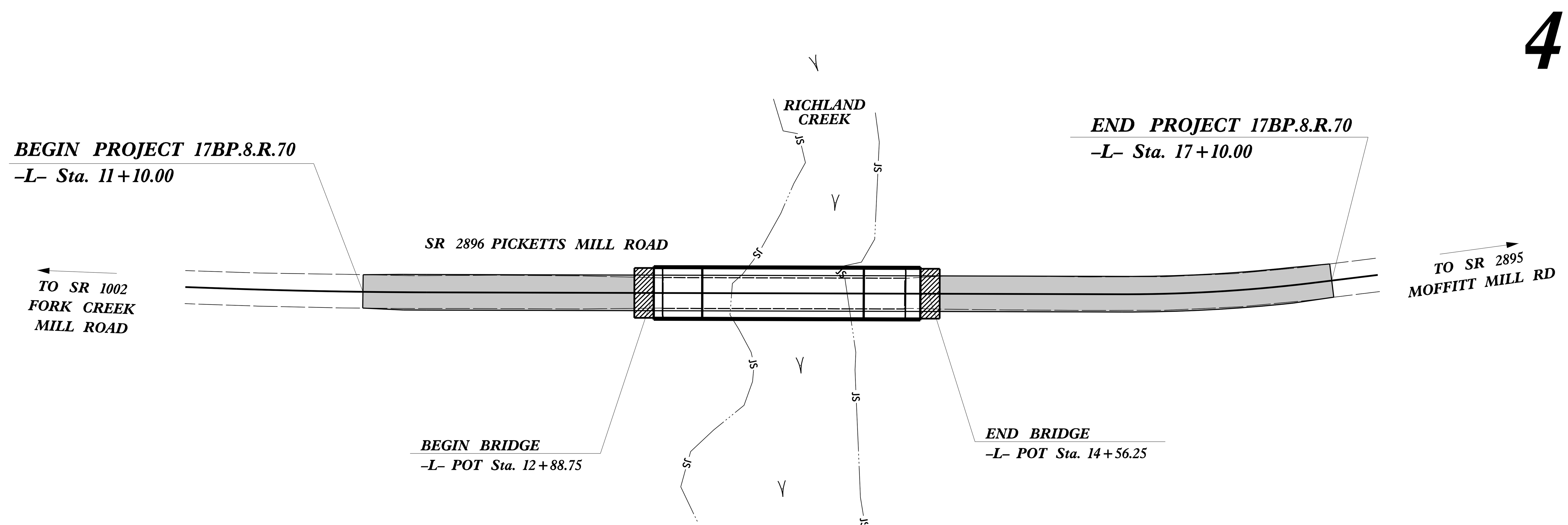


**DOCUMENT NOT CONSIDERED FINAL UNLESS ALL SIGNATURES COMPLETED**

### GRAPHIC SCALES

50 0 50 100
PLANS

50 0 50 100
PROFILE (HORIZONTAL)

10 0 10 20
PROFILE (VERTICAL)

### DESIGN DATA

ADT 2000 = 70
ADT 2025 = 140
DHV = %
D = %
T = % *
V = 55 MPH
* TTST = DUAL
FUNC CLASS =
LOCAL
SUBREGIONAL TIER

### PROJECT LENGTH

| | | |
|---|---|---|
| LENGTH ROADWAY PROJECT 17BP.8.R.70 | = | 0.082 mi |
| LENGTH STRUCTURE PROJECT 17BP.8.R.70 | = | 0.032 mi |
| TOTAL LENGTH OF PROJECT 17BP.8.R.70 | = | 0.114 mi |

PLANS PREPARED BY:
CH ENGINEERING
3220 GLEN ROYAL RD. RALEIGH, NC 27617
TELE 919.788.0224 FAX 919.788.0232
NC LICENSE #P-0189

2012 STANDARD SPECIFICATIONS

RIGHT OF WAY DATE:
May 29, 2014

LETTING DATE:
September 12, 2017

PLANS PREPARED FOR:
DIVISION OF HIGHWAYS
DIVISION 8
902 N Sandhills Blvd
Aberdeen, NC 28315

BRIAN A. WILES, PE
PROJECT ENGINEER

NCDOT CONTACT: TIM WELCH, PE
DIVSION 8 BRIDGE PROGRAM MANAGER

HYDRAULICS ENGINEER

DocuSigned by: Jason Lawing
B53ABA2D65E1407...
SIGNATURE: P.E.
NORTH CAROLINA PROFESSIONAL SEAL 032615 ENGINEER JASON D. LAWING
8/1/2017

ROADWAY DESIGN ENGINEER

8/1/2017
DocuSigned by: Brian A Wiles
8890D0FEA2E34DE...
SIGNATURE: P.E.
NORTH CAROLINA PROFESSIONAL SEAL 16689 ENGINEER BRIAN ALLEN WILES

STATE OF NORTH CAROLINA DEPARTMENT OF TRANSPORTATION

7/31/2017
R:\Roadway\Proj\750212_rdy_tsh.dgn
_USERNAME_

DocuSign Envelope ID: 079AFA15-8C27-4251-8FEC-FCA35FC51718

6/2/99

CH ENGINEERING
3220 GLEN ROYAL RD. RALEIGH, NC 27617
TELE 919.788.0224 FAX 919.788.0232
NC LICENSE #P-0189

| PROJECT REFERENCE NO. | SHEET NO. |
|---|---|
| 17BP.8.R.70 | 1-A |

ROADWAY DESIGN ENGINEER
7/31/2017
NORTH CAROLINA PROFESSIONAL SEAL 16689 ENGINEER BRIAN ALLEN VALES
Docusigned by: Brian A Vales
B890DFEA2E34DE...

**DOCUMENT NOT CONSIDERED FINAL UNLESS ALL SIGNATURES COMPLETED**

INDEX OF SHEETS


| SHEET NUMBER | SHEET |
|---|---|
| 1 | TITLE SHEET |
| 1A | INDEX OF SHEETS, GENERAL NOTES AND STANDARD DRAWINGS |
| 1B | CONVENTIONAL SYMBOLS |
| 1C-1 | SURVEY CONTROL SHEETS |
| 2A-1 | PAVEMENT SCHEDULE, TYPICAL SECTIONS AND WEDGING DETAILS |
| 2C-1 THRU 2C-6 | GUARDRAIL PLACEMENT DETAILS |
| 2C-7 THRU 2C-10 | GUARDRAIL INSTALLATION DETAILS |
| 2C-11 THRU 2C-14 | STRUCTURE ANCHOR DETAILS |
| 3B-1 | SUMMARIES OF EARTHWORK, ASPHALT PAVEMENT REMOVAL, SHOULDER BERM GUTTER AND GUARDRAIL |
| 3D-1 | LIST OF PIPES, ENDWALLS, ETC. (for PIPES 48" & UNDER) |
| 4 | PLAN SHEET |
| 5 | PROFILE SHEET |
| TMP-1 THRU TMP-3 | TRAFFIC MANAGEMENT PLANS |
| EC-1 THRU EC-5 | EROSION CONTROL PLANS |
| UO-1 THRU UO-2 | UTILITIES BY OTHERS PLANS |
| X-1 THRU X-12 | CROSS-SECTIONS |
| S-1 THRU S-26 | STRUCTURE PLANS |


GENERAL NOTES:

2012 SPECIFICATIONS
EFFECTIVE: 01-17-2012
REVISED: 01-24-2017

GRADE LINE:
GRADING AND SURFACING:

THE GRADE LINES SHOWN DENOTE THE FINISHED ELEVATION OF THE PROPOSED SURFACING AT GRADE POINTS SHOWN ON THE TYPICAL SECTIONS. GRADE LINES MAY BE ADJUSTED AT THEIR BEGINNING AND ENDING AND AT STRUCTURES AS DIRECTED BY THE ENGINEER IN ORDER TO SECURE A PROPER TIE-IN.

CLEARING:

CLEARING ON THIS PROJECT SHALL BE PERFORMED TO THE LIMITS ESTABLISHED BY METHOD III.

SUPERELEVATION:

ALL CURVES ON THIS PROJECT SHALL BE SUPERELEVATED IN ACCORDANCE WITH STD. NO. 225.04 USING THE RATE OF SUPERELEVATION AND RUNOFF SHOWN ON THE PLANS. SUPERELEVATION IS TO BE REVOLVED ABOUT THE GRADE POINTS SHOWN ON THE TYPICAL SECTIONS.

SHOULDER CONSTRUCTION:

ASPHALT, EARTH, AND CONCRETE SHOULDER CONSTRUCTION ON THE HIGH SIDE OF SUPERELEVATED CURVES SHALL BE IN ACCORDANCE WITH STD. NO. 560.01

SIDE ROADS:

THE CONTRACTOR WILL BE REQUIRED TO DO ALL NECESSARY WORK TO PROVIDE SUITABLE CONNECTIONS WITH ALL ROADS, STREETS, AND DRIVES ENTERING THIS PROJECT. THIS WORK WILL BE PAID FOR AT THE CONTRACT UNIT PRICE FOR THE PARTICULAR ITEMS INVOLVED.

GUARDRAIL:

THE GUARDRAIL LOCATIONS SHOWN ON THE PLANS MAY BE ADJUSTED DURING CONSTRUCTION AS DIRECTED BY THE ENGINEER. THE CONTRACTOR SHOULD CONSULT WITH THE ENGINEER PRIOR TO ORDERING GUARDRAIL MATERIAL.

TEMPORARY SHORING:

SHORING REQUIRED FOR THE MAINTENANCE OF TRAFFIC WILL BE PAID FOR AS "EXTRA WORK" IN ACCORDANCE WITH SECTION 104-7.

END BENTS:

THE ENGINEER SHALL CHECK THE STRUCTURE END BENT PLANS, DETAILS, AND CROSS-SECTION PRIOR TO SETTING OF THE SLOPE STAKES FOR THE EMBANKMENT OR EXCAVATION APPROACHING A BRIDGE.

UTILITIES:

UTILITY OWNERS ON THIS PROJECT ARE Randolph EMC - Power and Randolph Telephone Membership Corp. - Communications.

ANY RELOCATION OF EXISTING UTILITIES WILL BE ACCOMPLISHED BY OTHERS, EXCEPT AS SHOWN ON THE PLANS.

RIGHT-OF-WAY MARKERS:

ALL RIGHT-OF-WAY MARKERS ON THIS PROJECT SHALL BE PLACED BY CONTRACT.

EFF. 01-17-2012
REV. 05-24-2017

2012 ROADWAY ENGLISH STANDARD DRAWINGS

The following Roadway Standards as appear in "Roadway Standard Drawings" Highway Design Branch - N. C. Department of Transportation - Raleigh, N. C., Dated January, 2012 are applicable to this project and by reference hereby are considered a part of these plans:

| STD.NO. | TITLE |
|---|---|
| DIVISION 2 - EARTHWORK | |
| 200.03 | Method of Clearing - Method III |
| 225.02 | Guide for Grading Subgrade - Secondary and Local |
| 225.04 | Method of Obtaining Superelevation - Two Lane Pavement |
| DIVISION 3 - PIPE CULVERTS | |
| 300.01 | Method of Pipe Installation |
| DIVISION 4 - MAJOR STRUCTURES | |
| 422.11 | Bridge Approach Fills - Sub Regional Tier |
| DIVISION 5 - SUBGRADE, BASES AND SHOULDERS | |
| 560.01 | Method of Shoulder Construction - High Side of Superelevated Curve - Method I |
| DIVISION 6 - ASPHALT BASES AND PAVEMENTS | |
| 654.01 | Pavement Repairs |
| DIVISION 8 - INCIDENTALS | |
| 806.01 | Concrete Right-of-Way Marker |
| 806.02 | Granite Right-of-Way Marker |
| 840.00 | Concrete Base Pad for Drainage Structures |
| 840.25 | Anchorage for Frames - Brick or Concrete or Precast |
| 840.29 | Frames and Narrow Slot Flat Grates |
| 840.35 | Traffic Bearing Grated Drop Inlet - for Cast Iron Double Frame and Grates |
| 840.46 | Traffic Bearing Precast Drainage Structure |
| 840.66 | Drainage Structure Steps |
| 846.01 | Concrete Curb, Gutter and Curb & Gutter |
| 846.04 | Drop Inlet Installation in Shoulder Berm Gutter |
| 876.02 | Guide for Rip Rap at Pipe Outlets |
| 876.04 | Drainage Ditches with Class 'B' Rip Rap |

7/31/2017
R:\Roadway\Proj\750212_rdy_psh01a.dgn
USER:BVALES

12/05/11

| PROJECT REFERENCE NO. | SHEET NO. |
|---|---|
| 17BP.8.R.70 | 1-B |

***Note: Not to Scale***

***S.U.E. = Subsurface Utility Engineering***

STATE OF NORTH CAROLINA
DIVISION OF HIGHWAYS

# CONVENTIONAL PLAN SHEET SYMBOLS

## *BOUNDARIES AND PROPERTY:*

- State Line
- County Line
- Township Line
- City Line
- Reservation Line
- Property Line
- Existing Iron Pin — EIP
- Property Corner
- Property Monument — ECM
- Parcel/Sequence Number — 123
- Existing Fence Line
- Proposed Woven Wire Fence
- Proposed Chain Link Fence
- Proposed Barbed Wire Fence
- Existing Wetland Boundary — WLB
- Proposed Wetland Boundary — WLB
- Existing Endangered Animal Boundary — EAB
- Existing Endangered Plant Boundary — EPB
- Known Soil Contamination: Area or Site
- Potential Soil Contamination: Area or Site

## *BUILDINGS AND OTHER CULTURE:*

- Gas Pump Vent or U/G Tank Cap
- Sign — S
- Well — W
- Small Mine
- Foundation
- Area Outline
- Cemetery
- Building
- School
- Church
- Dam

## *HYDROLOGY:*

- Stream or Body of Water
- Hydro, Pool or Reservoir
- Jurisdictional Stream — JS
- Buffer Zone 1 — BZ 1
- Buffer Zone 2 — BZ 2
- Flow Arrow
- Disappearing Stream
- Spring
- Wetland
- Proposed Lateral, Tail, Head Ditch — FLOW
- False Sump

## *RAILROADS:*

- Standard Gauge — CSX TRANSPORTATION
- RR Signal Milepost — MILEPOST 35
- Switch — SWITCH
- RR Abandoned
- RR Dismantled

## *RIGHT OF WAY:*

- Baseline Control Point
- Existing Right of Way Marker
- Existing Right of Way Line
- Proposed Right of Way Line — RW
- Proposed Right of Way Line with Iron Pin and Cap Marker — RW
- Proposed Right of Way Line with Concrete or Granite R/W Marker — RW
- Proposed Control of Access Line with Concrete C/A Marker — CA
- Existing Control of Access — CA
- Proposed Control of Access — CA
- Existing Easement Line — E
- Proposed Temporary Construction Easement — E
- Proposed Temporary Drainage Easement — TDE
- Proposed Permanent Drainage Easement — PDE
- Proposed Permanent Drainage / Utility Easement — DUE
- Proposed Permanent Utility Easement — PUE
- Proposed Temporary Utility Easement — TUE
- Proposed Aerial Utility Easement — AUE
- Proposed Permanent Easement with Iron Pin and Cap Marker

## *ROADS AND RELATED FEATURES:*

- Existing Edge of Pavement
- Existing Curb
- Proposed Slope Stakes Cut — C
- Proposed Slope Stakes Fill — F
- Proposed Curb Ramp — CR
- Existing Metal Guardrail
- Proposed Guardrail
- Existing Cable Guiderail
- Proposed Cable Guiderail
- Equality Symbol
- Pavement Removal

## *VEGETATION:*

- Single Tree
- Single Shrub
- Hedge
- Woods Line
- Orchard
- Vineyard — Vineyard

## *EXISTING STRUCTURES:*

MAJOR:

- Bridge, Tunnel or Box Culvert — CONC
- Bridge Wing Wall, Head Wall and End Wall — CONC WW

MINOR:

- Head and End Wall — CONC HW
- Pipe Culvert
- Footbridge
- Drainage Box: Catch Basin, DI or JB — CB
- Paved Ditch Gutter
- Storm Sewer Manhole — S
- Storm Sewer — S

## *UTILITIES:*

POWER:

- Existing Power Pole
- Proposed Power Pole
- Existing Joint Use Pole
- Proposed Joint Use Pole
- Power Manhole — P
- Power Line Tower
- Power Transformer
- U/G Power Cable Hand Hole
- H–Frame Pole
- Recorded U/G Power Line — P
- Designated U/G Power Line (S.U.E.*) — P

TELEPHONE:

- Existing Telephone Pole
- Proposed Telephone Pole
- Telephone Manhole — T
- Telephone Booth
- Telephone Pedestal — T
- Telephone Cell Tower
- U/G Telephone Cable Hand Hole — HH
- Recorded U/G Telephone Cable — T
- Designated U/G Telephone Cable (S.U.E.*) — T
- Recorded U/G Telephone Conduit — TC
- Designated U/G Telephone Conduit (S.U.E.*) — TC
- Recorded U/G Fiber Optics Cable — T FO
- Designated U/G Fiber Optics Cable (S.U.E.*) — T FO

WATER:

- Water Manhole — W
- Water Meter
- Water Valve
- Water Hydrant
- Recorded U/G Water Line — W
- Designated U/G Water Line (S.U.E.*) — W
- Above Ground Water Line — A/G Water

TV:

- TV Satellite Dish
- TV Pedestal — C
- TV Tower
- U/G TV Cable Hand Hole — HH
- Recorded U/G TV Cable — TV
- Designated U/G TV Cable (S.U.E.*) — TV
- Recorded U/G Fiber Optic Cable — TV FO
- Designated U/G Fiber Optic Cable (S.U.E.*) — TV FO

GAS:

- Gas Valve
- Gas Meter
- Recorded U/G Gas Line — G
- Designated U/G Gas Line (S.U.E.*) — G
- Above Ground Gas Line — A/G Gas

SANITARY SEWER:

- Sanitary Sewer Manhole
- Sanitary Sewer Cleanout
- U/G Sanitary Sewer Line — SS
- Above Ground Sanitary Sewer — A/G Sanitary Sewer
- Recorded SS Forced Main Line — FSS
- Designated SS Forced Main Line (S.U.E.*) — FSS

MISCELLANEOUS:

- Utility Pole
- Utility Pole with Base
- Utility Located Object
- Utility Traffic Signal Box — S
- Utility Unknown U/G Line — ?UTL
- U/G Tank; Water, Gas, Oil
- Underground Storage Tank, Approx. Loc. — UST
- A/G Tank; Water, Gas, Oil
- Geoenvironmental Boring
- U/G Test Hole (S.U.E.*)
- Abandoned According to Utility Records — AATUR
- End of Information — E.O.I.

6/2/99

# SURVEY CONTROL SHEET 17BP.8.R.70
# RANDOLPH COUNTY #212
## (FINAL)


CH ENGINEERING
3220 GLEN ROYAL RD. RALEIGH, NC 27617
TELE 919.788.0224 FAX 919.788.0232
NC LICENSE #P-0189


| PROJECT REFERENCE NO. | SHEET NO. |
|---|---|
| 17BP.8.R.70 | 1C-1 |

| BL | POINT | DESC. | NORTH | EAST | ELEVATION | L STATION | OFFSET |
|---|---|---|---|---|---|---|---|
| 1 | | GPS 750212-1 | 674857.4620 | 1803538.1320 | 492.88 | OUTSIDE PROJECT LIMITS | |
| 2 | | GPS 750212-2 | 674334.9480 | 1803243.2060 | 497.14 | OUTSIDE PROJECT LIMITS | |
| 101 | | BL-101 | 675169.6530 | 1803653.9090 | 474.91 | OUTSIDE PROJECT LIMITS | |
| 102 | | BL-102 | 675631.5460 | 1803710.3050 | 445.59 | 14+58.21 | 13.78 LT |
| 103 | | BL-103 | 675903.3700 | 1803776.6360 | 452.94 | 17+36.10 | 15.77 RT |

**********
BM1 ELEVATION = 435.65
N 675590 E 1803781
L STATION 14+29.76 62.81' RIGHT
RR SPIKE IN BASE OF 24" SWEETGUM TREE
**********

ROW MARKER REBAR

| ALIGN | STATION | OFFSET | NORTH | EAST |
|---|---|---|---|---|
| L | 12+70.00 | -30.00 | 675449.14562 | 1803661.13955 |
| L | 12+70.00 | -50.00 | 675452.67315 | 1803641.45309 |
| L | 14+85.00 | -50.00 | 675664.30256 | 1803679.37398 |
| L | 14+85.00 | -30.00 | 675660.77503 | 1803699.06044 |
| L | 12+70.00 | 30.00 | 675438.56305 | 1803720.19892 |
| L | 12+70.00 | 50.00 | 675435.03553 | 1803739.88538 |
| L | 14+85.00 | 50.00 | 675646.66494 | 1803777.80626 |
| L | 14+85.00 | 30.00 | 675650.19246 | 1803758.11981 |

L

| TYPE | STATION | NORTH | EAST |
|---|---|---|---|
| POT | 10+00.00 | 675178.6126 | 1803640.3060 |
| PC | 10+31.64 | 675209.5658 | 1803646.8435 |
| PT | 11+49.42 | 675325.1607 | 1803669.4011 |
| PC | 15+79.85 | 675748.8439 | 1803745.2189 |
| PT | 16+99.75 | 675867.8819 | 1803759.0114 |
| POT | 17+38.69 | 675906.7732 | 1803761.0256 |

PERMAMENT EASEMENT REBAR

| ALIGN | STATION | OFFSET | NORTH | EAST |
|---|---|---|---|---|
| L | 10+68.10 | -30.00 | 675251.19845 | 1803624.79796 |
| L | 11+68.84 | -64.91 | 675354.94289 | 1803608.79109 |
| L | 15+55.68 | -75.09 | 675738.29995 | 1803667.14323 |
| L | 16+73.57 | -30.00 | 675844.13480 | 1803727.39344 |
| | | | | |
| L | 11+00.00 | 30.00 | 675270.90433 | 1803689.82965 |
| L | 11+00.00 | 40.00 | 675269.01338 | 1803699.64924 |
| L | 11+85.00 | 40.00 | 675353.13185 | 1803715.05017 |
| L | 12+50.00 | 60.00 | 675413.58531 | 1803746.20108 |
| L | 15+00.00 | 69.00 | 675658.07863 | 1803799.15404 |
| L | 17+25.00 | 40.00 | 675891.03056 | 1803800.26389 |
| L | 17+25.00 | 30.00 | 675891.54776 | 1803790.27727 |
| L | 16+12.82 | -55.00 | 675789.22349 | 1803696.13324 |
| L | 16+65.00 | -55.00 | 675838.06898 | 1803781.79677 |
| L | 16+99.75 | -30.00 | 675869.43348 | 1803729.05158 |

NAD 83 NC GRID NA 2011

*NCDOT GPS (750212-1)*
*LOCALIZED PROJECT COORDINATES*
*N = 674857.4620*
*E = 1803538.1320*

*NCDOT GPS (750212-2)*
*LOCALIZED PROJECT COORDINATES*
*N = 674334.9480*
*E = 1803243.2060*

*-L- POC STA. 11+10.00*
*BEG PROJECT 17BP.8.R.70*
*LOCALIZED PROJECT COORDINATES*
*N = 675286.3992*
*E = 1803662.2490*

*NCDOT BASELINE MONUMENT (BL-101)*
*LOCALIZED PROJECT COORDINATES*
*N = 675169.6530*
*E = 1803653.9090*

*NCDOT BASELINE MONUMENT (BL-102)*
*LOCALIZED PROJECT COORDINATES*
*N = 675631.5460*
*E = 1803710.3050*

*-L- POT STA. 17+10.00*
*END TIP PROJECT 17BP.8.R.70*
*LOCALIZED PROJECT COORDINATES*
*N = 675878.1194*
*E = 1803759.5416*

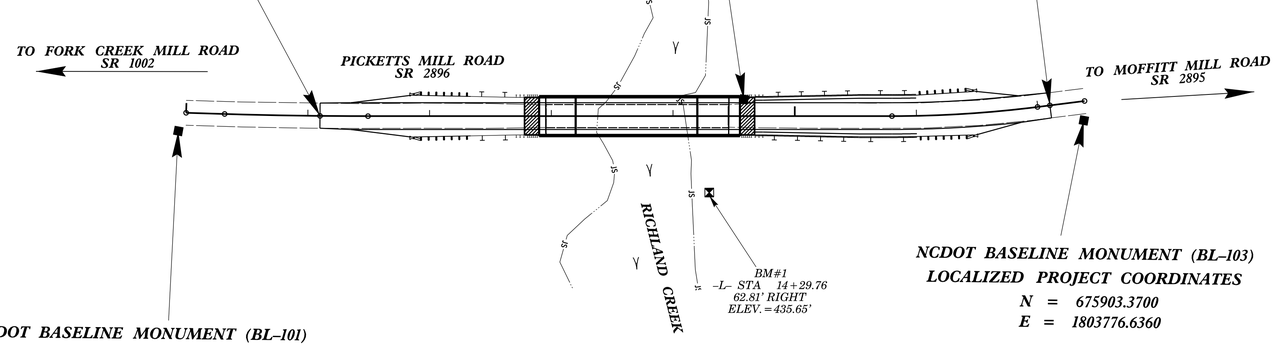


*NCDOT BASELINE MONUMENT (BL-103)*
*LOCALIZED PROJECT COORDINATES*
*N = 675903.3700*
*E = 1803776.6360*

## DATUM DESCRIPTION

THE LOCALIZED COORDINATE SYSTEM DEVELOPED FOR THIS PROJECT IS BASED ON THE STATE PLANE COORDINATES ESTABLISHED BY NCDOT FOR MONUMENT "750212-1" WITH NAD 83/NA 2011 STATE PLANE GRID COORDINATES OF NORTHING: 674857.4620(ft) EASTING: 1803538.1320(ft) ELEVATION: 492.8820(ft)
THE AVERAGE COMBINED GRID FACTOR USED ON THIS PROJECT (GROUND TO GRID) IS: 0.9998725268
THE N.C. LAMBERT GRID BEARING AND LOCALIZED HORIZONTAL GROUND DISTANCE FROM "750212-1" TO -L- STATION 11+10.00 IS N 16° 08' 17.8" E 446.53'
ALL LINEAR DIMENSIONS ARE LOCALIZED HORIZONTAL DISTANCES
VERTICAL DATUM USED IS NAVD 88

*NOTES:*

*SITE CALIBRATION INFORMATION HAS NOT BEEN PROVIDED FOR THIS PROJECT. IF FURTHER INFORMATION IS NEEDED, PLEASE CONTACT THE LOCATION AND SURVEYS UNIT.*

◆ *INDICATES CONTROL MONUMENTS USED OR SET FOR HORIZONTAL PROJECT CONTROL BY THE NCDOT LOCATION AND SURVEYS UNIT.*

● *INDICATES GEODETIC CONTROL MONUMENTS USED OR SET FOR HORIZONTAL PROJECT CONTROL BY THE NCDOT LOCATION AND SURVEYS UNIT.*

*PROJECT CONTROL ESTABLISHED USING GLOBAL POSITIONING SYSTEM.*

*NOTE: DRAWING NOT TO SCALE*

7/3/2017
R:\Roadway Proj\750212_rdy_1C-1.dgn
USER:NAME

6/2/99

## PAVEMENT SCHEDULE

| | |
|---|---|
| C1 | PROP. APPROX. 2″ ASPHALT CONCRETE SURFACE COURSE, TYPE SF9.5A, AT AN AVERAGE RATE OF 110 LBS. PER SQ. YD. IN EACH OF TWO LAYERS. |
| C2 | PROP. VAR. DEPTH ASPHALT CONCRETE SURFACE COURSE, TYPE SF9.5A, AT AN AVERAGE RATE OF 110 LBS. PER SQ. YD. PER 1″ DEPTH. TO BE PLACED IN LAYERS NOT TO EXCEED 1½″ IN DEPTH. |
| D1 | PROP. APPROX. 3″ ASPHALT CONCRETE INTERMEDIATE COURSE, TYPE I19.0B, AT AN AVERAGE RATE OF 342 LBS. PER SQ. YD. |
| D2 | PROP. VAR. DEPTH ASPHALT CONCRETE INTERMEDIATE COURSE, TYPE I19.0B, AT AN AVERAGE RATE OF 114 LBS. PER SQ. YD. PER 1″ DEPTH, TO BE PLACED IN LAYERS NOT LESS THAN 2½″ IN DEPTH OR GREATER THAN 4″ IN DEPTH. |
| E1 | PROP. APPROX. 5½″ ASPHALT CONCRETE BASE COURSE, TYPE B25.0B, AT AN AVERAGE RATE OF 627 LBS. PER SQ. YD. |
| E2 | PROP. VAR. DEPTH ASPHALT CONCRETE BASE COURSE, TYPE B25.0B, AT AN AVERAGE RATE OF 114 LBS. PER SQ. YD. PER 1″ DEPTH. TO BE PLACED IN LAYERS NOT LESS THAN 3″ IN DEPTH OR GREATER THAN 5½″ IN DEPTH. |
| T | EARTH MATERIAL. |
| U | EXISTING PAVEMENT. |
| W | VARIABLE DEPTH ASPHALT PAVEMENT (SEE STANDARD WEDGING DETAIL THIS SHEET) |

NOTE: PAVEMENT EDGE SLOPES ARE 1:1 UNLESS SHOWN OTHERWISE.

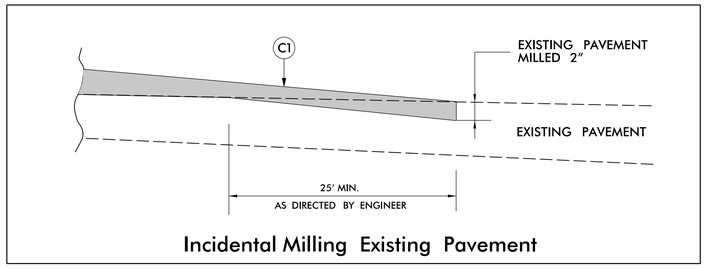


Incidental Milling Existing Pavement

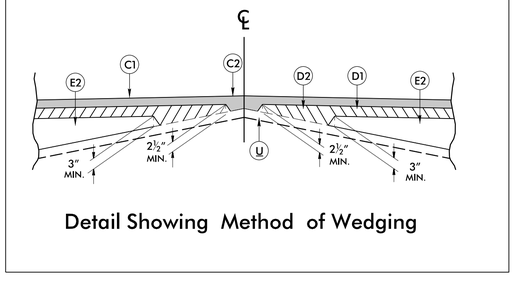


Detail Showing Method of Wedging


CH ENGINEERING
3220 GLEN ROYAL RD. RALEIGH, NC 27617
TELE 919.788.0224 FAX 919.788.0232
NC LICENSE #P-0189


| PROJECT REFERENCE NO. | SHEET NO. |
|---|---|
| 17BP.8.R.70 | 2A-1 |

ROADWAY DESIGN ENGINEER 8/7/2017

PAVEMENT DESIGN ENGINEER

NORTH CAROLINA PROFESSIONAL SEAL 16689 ENGINEER BRIAN ALLEN WILES

Brian A Wiles

DOCUMENT NOT CONSIDERED FINAL UNLESS ALL SIGNATURES COMPLETED

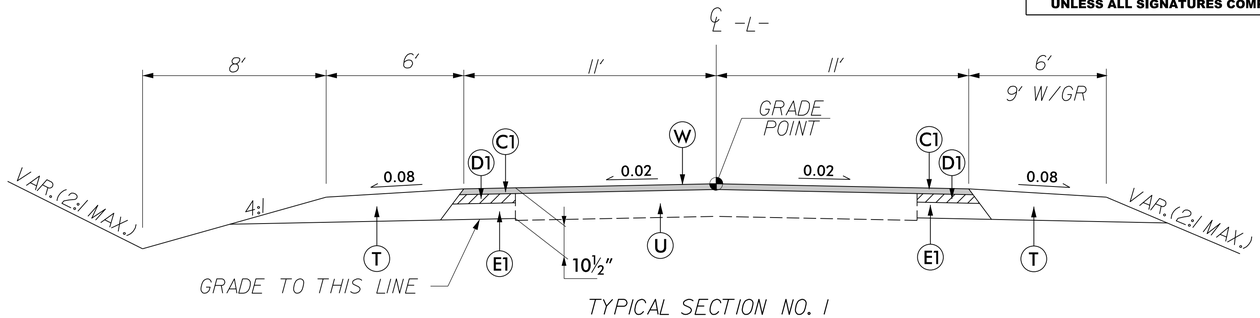


TYPICAL SECTION NO. 1

-L- STA 11+10.00 TO -L- STA 12+00.00
-L- STA 15+50.00 TO -L- STA 17+10.00

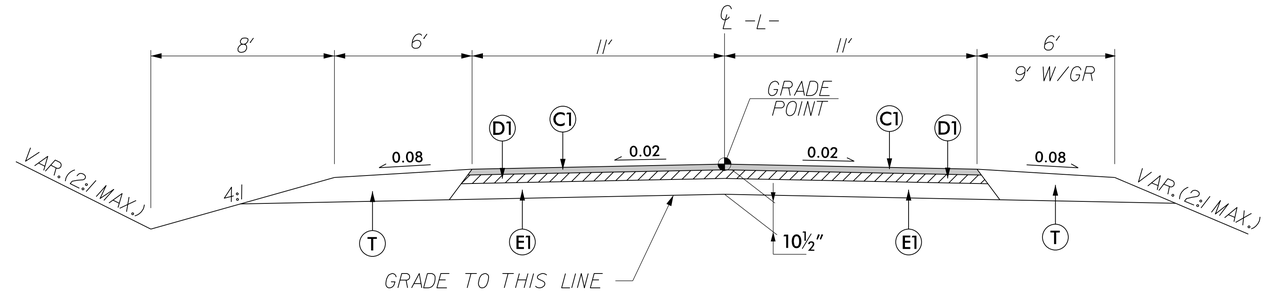


TYPICAL SECTION NO. 2

-L- STA 12+00.00 TO -L- STA 12+88.75 (BEGIN BRIDGE)
-L- STA 14+56.25 (END BRIDGE) TO -L- STA 15+50.00

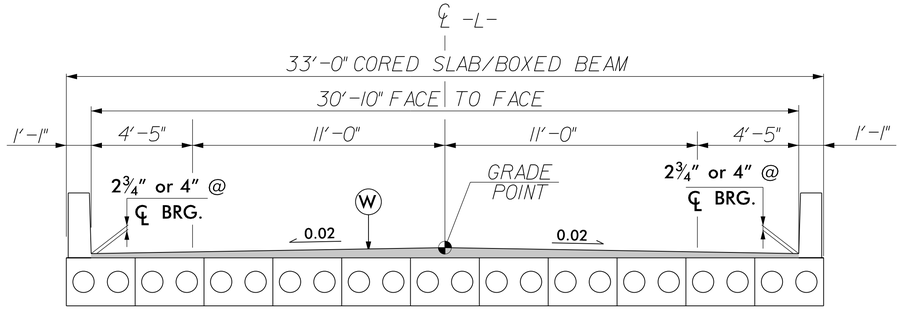


TYPICAL SECTION NO. 3

-L- STA 12+88.75 TO -L- STA 14+56.25

2¾″ ℄ Bearing for Span A and C
4″ ℄ Bearing for Span B.


8/7/2017
R:\Roadway\Proj\750212_rdy_typ.dgn

DocuSign Envelope ID: 004418D4-5690-4BEF-87E2-879DC84A434F

| PROJECT REFERENCE NO. | SHEET NO. |
|---|---|
| 17BP.8.R.70 | 2C-1 |



## DETAIL OF MEDIAN TREATMENT AT UNDERPASS

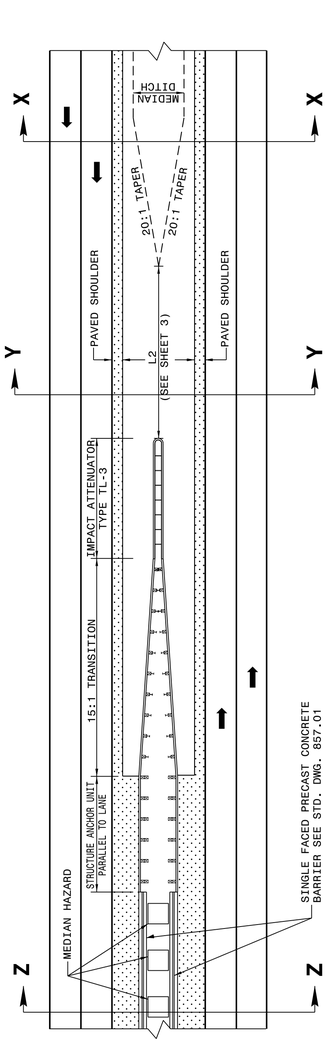


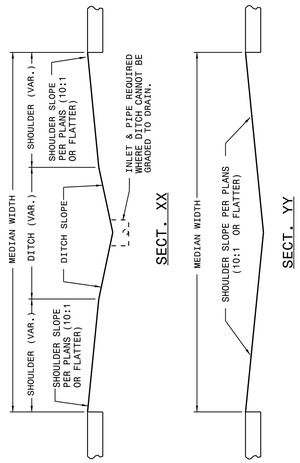


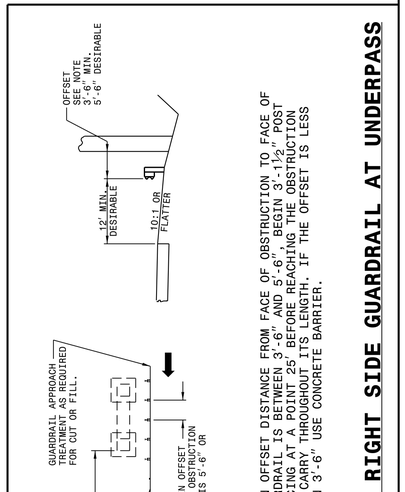


NOTE: WHEN OFFSET DISTANCE FROM FACE OF OBSTRUCTION TO FACE OF GUARDRAIL IS BETWEEN 3'-6" AND 5'-6", BEGIN 6'-3" POST SPACING AT A POINT 25' BEFORE REACHING THE OBSTRUCTION AND CARRY THROUGHOUT ITS LENGTH. IF THE OFFSET IS LESS THAN 3'-6" USE CONCRETE BARRIER.

## DETAIL OF RIGHT SIDE GUARDRAIL AT UNDERPASS





## DETAIL OF GUARDRAIL AT MEDIAN SIGN SUPPORT

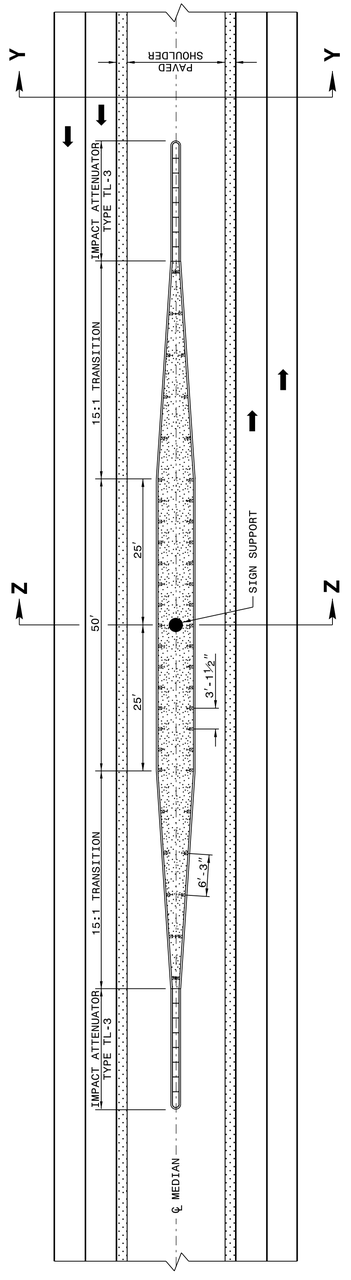


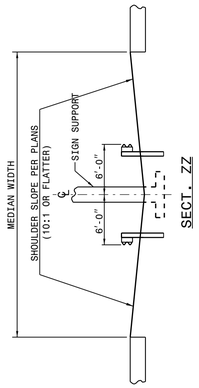


NOTE SPECIAL LAYER OF PAVEMENT .....

USE 3'-11½" POST SPACING ON THE 50' OF GUARDRAIL PARALLEL TO LANES AND 6'-3" POST SPACING ON 15:1 TRANSITION SECTIONS.
GRADE MEDIAN IN THE VICINITY OF THE SIGN SUPPORT AS ILLUSTRATED IN THE ROADWAY STANDARD DRAWINGS (STARDARD 862D01 SHEET 1 OF 12).

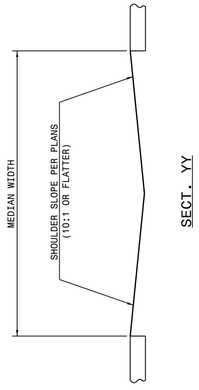


## DETAIL OF GUARDRAIL AT MEDIAN SIGN SUPPORT



NORTH CAROLINA PROFESSIONAL ENGINEER SEAL 022966 Jason Hibbard
DocuSigned by: 873F3D17DCDC45F...
8/1/2017

DOCUMENT NOT CONSIDERED FINAL UNLESS ALL SIGNATURES COMPLETED

**CONTRACT STANDARDS AND DEVELOPMENT UNIT**
Office 919-707-6950 FAX 919-250-4119

**SEE TITLE BLOCK**

ORIGINAL BY: J HOWERTON DATE: 06-22-12
MODIFIED BY: _____ DATE: _____
CHECKED BY: _____ DATE: _____
FILE SPEC.: _____

04-MAY-2017 15:14
S:\Contracts\Contracts\Special Details\jhowerton\Standard Drawings\2012 Standard Drawings\Details in Lieu of Standards\862d01.dgn
jhowerton AT CSD-212595

DocuSign Envelope ID: 00441B04-5690-4BEF-87E2-87BDC84A43AF

04-MAY-2017 15:14
S:\Contracts\Contracts\Special Details\jhowerton\Standard Drawings\2012 Standard Drawings\Details in Lieu of Standards\Division 8\862d01 862d03 862d03\862d01.dgn
jhowerton AT CSD-292595

STATE OF NORTH CAROLINA
DEPT. OF TRANSPORTATION
DIVISION OF HIGHWAYS
RALEIGH, N.C.

ROADWAY DETAIL DRAWING FOR
**GUARDRAIL PLACEMENT**

SHEET 4 OF 11
**862D01**

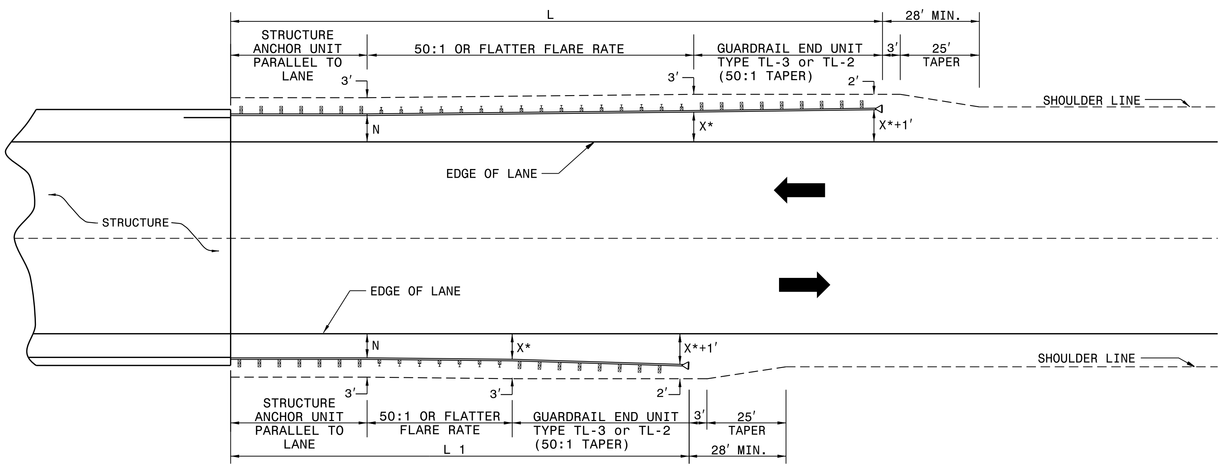


* USE FLARE RATE AS THE CONTROL IF THE "X" DISTANCE IS NOT OBTAINED. ("X" IS BASED ON SHOULDER WIDTHS IN THE HIGHWAY DESIGN BRANCH MANUAL, PART 1, 1-4B, F1).

"N"= DISTANCE FROM EDGE OF LANE TO FACE OF GUARDRAIL WHERE GUARDRAIL IS PARALLEL TO LANE.

SEE STD. 862.03 FOR STRUCTURE ANCHOR UNITS

FOR POSTED SPEEDS ≥ 45mph USE GREU TYPE TL-3
FOR POSTED SPEEDS < 45mph USE GREU TYPE TL-2

GUARDRAIL INSTALLATION AT BRIDGE APPROACHES
FOR TWO-LANE, TWO-WAY TRAFFIC

| DESIGN SPEED (MPH) | "L" APPROACH LENGTH (FT.) | | | | "L1" TRAILING LENGTH (FT.) | | | |
|---|---|---|---|---|---|---|---|---|
| | DESIGN YEAR ADT | | CURRENT YEAR ADT | | DESIGN YEAR ADT | | CURRENT YEAR ADT | |
| | OVER 2000 | 1001-2000 | 400-1000 | UNDER 400 | OVER 2000 | 1001-2000 | 400-1000 | UNDER 400 |
| 70 | 362.5' | 362.5' | 350.0' | 287.5' | 187.5' | 187.5' | 175.0' | 75.0' |
| 60 | 300.0' | 287.5 | 275.0' | 225.0' | 137.5' | 137.5' | 100.0' | 75.0' |
| 50 | 212.5' | 212.5' | 200.0' | 162.5' | 87.5' | 75.0' | 75.0' | 75.0' |
| 40 | 175.0' | 150.0' | 137.5' | 112.5' | 75.0' | 75.0' | 75.0' | 75.0' |
| | | | | | | | | |
| X * | 8' | 6' | 4' | 4' | 8' | 6' | 4' | 4' |

## LENGTHS AND OFFSETS FOR PROPOSED GUARDRAIL AT TWO LANE - TWO WAY LOCATIONS

STATE OF NORTH CAROLINA
DEPT. OF TRANSPORTATION
DIVISION OF HIGHWAYS
RALEIGH, N.C.

ROADWAY DETAIL DRAWING FOR
**GUARDRAIL PLACEMENT**

SHEET 4 OF 11
**862D01**

STATE OF NORTH CAROLINA
DEPT. OF TRANSPORTATION
DIVISION OF HIGHWAYS
RALEIGH, N.C.

ROADWAY DETAIL DRAWING FOR
**GUARDRAIL PLACEMENT**

SHEET 3 OF 11
**862D01**

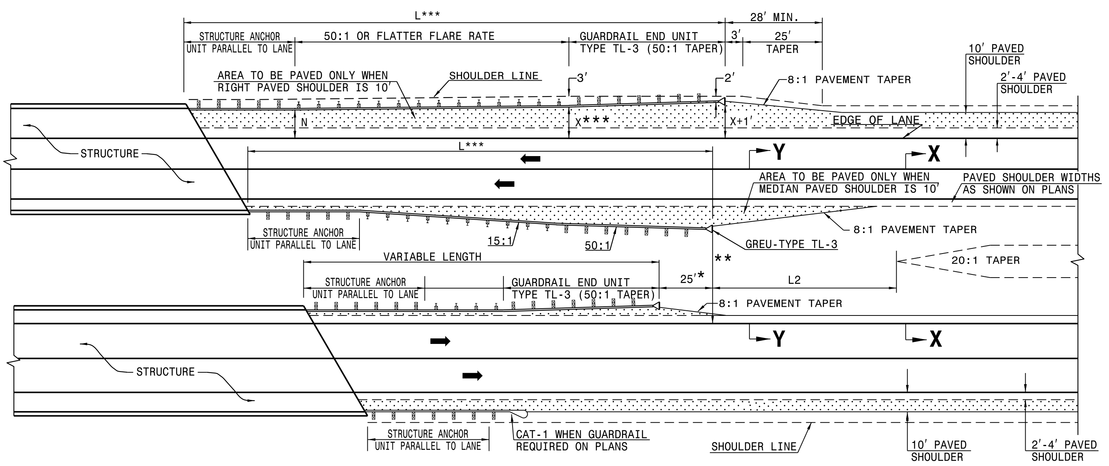


FOR POSTED SPEEDS ≥ 45mph USE GREU TYPE TL-3
FOR POSTED SPEEDS < 45mph USE GREU TYPE TL-2

DIMENSIONS FOR LENGTH OF GUARDRAIL APPROACHING DUAL LANE BRIDGES

| MEDIAN WIDTH | -L-*** | | | | | | -L2- DIM. |
|---|---|---|---|---|---|---|---|
| | 70 MPH | 60 MPH | 50 MPH | | | | |
| 30' | 300.0' | 250.0' | 150.0' | | | | 80.0' |
| 36' | 300.0' | 250.0' | 150.0' | | | | 60.0' |
| 40' & ABOVE | 300.0' | 250.0' | 150.0' | | | | 40.0' |

NOTES: * MINOR VARIATION TO THE 25'-0" DIMENSION IS PERMISSIBLE TO ACCOMODATE THE 12'-6" IN GUARDRAIL LENGTHS.

** NO GUARDRAIL IS REQUIRED ON THE TRAILING END WHEN THIS DISTANCE EXCEEDS CLEAR ROADSIDE RECOVERY AREA FOR THE APPROPRIATE DESIGN SPEED.

*** BASED ON "X" OF 12'
USE FLARE RATE AS THE CONTROL IF THE "X" DISTANCE IS NOT OBTAINED. ("X" IS BASED ON SHOULDER WIDTHS IN THE HIGHWAY DESIGN BRANCH MANUAL, PART 1, 1-4B, F1A).

"N"= DISTANCE FROM EDGE OF LANE TO FACE OF GUARDRAIL WHERE GUARDRAIL IS PARALLEL TO LANE.

THE DESIGN LAYOUT FOR LENGTHS SHOWN ON THIS STANDARD ARE MINIMUM DESIGN LENGTHS.

SEE SHEET 1 OF 12 FOR SECTIONS XX, YY

SEE STD. 862.03 FOR STRUCTURE ANCHOR UNITS

## DETAIL OF GUARDRAIL APPROACHING DUAL LANE BRIDGES

**SEE TITLE BLOCK**

ORIGINAL BY: J HOWERTON DATE: 06-22-12
MODIFIED BY: DATE:
CHECKED BY: DATE:
FILE SPEC.:

**CONTRACT STANDARDS AND DEVELOPMENT UNIT**
Office 919-707-6950 FAX 919-250-4119

DOCUMENT NOT CONSIDERED FINAL UNLESS ALL SIGNATURES COMPLETED

| PROJECT REFERENCE NO. | SHEET NO. |
|---|---|
| 17BP.8.R.70 | 2C-2 |

DocuSign Envelope ID: 00441B04-5690-4BEF-87E2-B79DC84A43AF

04-MAY-2017 15:15
S:\Contracts\Contracts\Special Details\jhowerton\Standard Drawings\2012 Standard Drawings\Details in Lieu of Standards\Division 8\862d01 862d03 862d03\862d01.dgn
jhowerton AT CSD-292595

STATE OF NORTH CAROLINA
DEPT. OF TRANSPORTATION
DIVISION OF HIGHWAYS
RALEIGH, N.C.

ROADWAY DETAIL DRAWING FOR
**GUARDRAIL PLACEMENT**

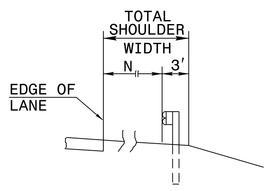


FILL SECTION

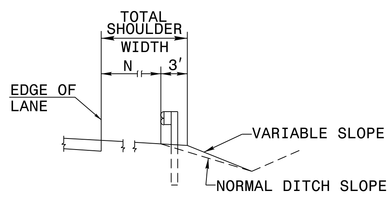


CUT SECTION

"N"= DISTANCE FROM EDGE OF LANE TO FACE OF GUARDRAIL WHERE GUARDRAIL IS PARALLEL TO LANE.

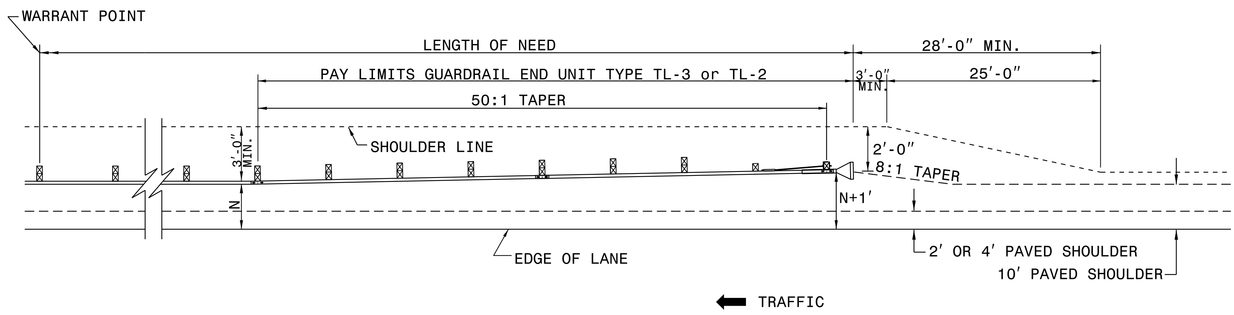


FOR POSTED SPEEDS ≥ 45mph USE GREU TYPE TL-3
FOR POSTED SPEEDS < 45mph USE GREU TYPE TL-2

## DETAIL OF BEGINNING OF GUARDRAIL IN CUT OR FILL SECTION

SHEET 6 OF 11
**862D01**

STATE OF NORTH CAROLINA
DEPT. OF TRANSPORTATION
DIVISION OF HIGHWAYS
RALEIGH, N.C.

ROADWAY DETAIL DRAWING FOR
**GUARDRAIL PLACEMENT**

SHEET 6 OF 11
**862D01**

STATE OF NORTH CAROLINA
DEPT. OF TRANSPORTATION
DIVISION OF HIGHWAYS
RALEIGH, N.C.

ROADWAY DETAIL DRAWING FOR
**GUARDRAIL PLACEMENT**

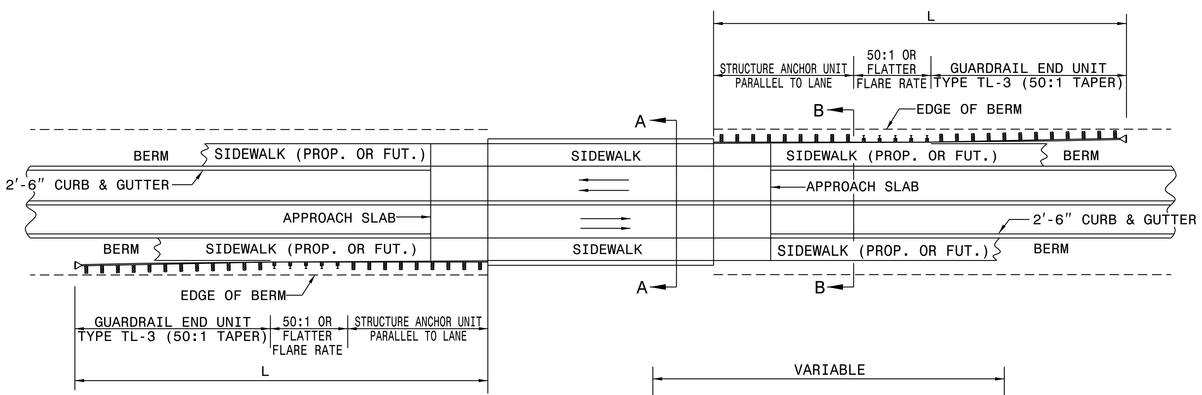


| MINIMUM GUARDRAIL LENGTHS "L" REQUIRED AT BRIDGE APPROACHES ON 2'-6" CONCRETE CURB AND GUTTER ROADWAYS | |
|---|---|
| DESIGN SPEED (MPH) | "L" |
| 40 | 150' |
| 50 | 225' |

NOTE: "L" VALUES ARE BASED ON NO HAZARDS OTHER THAN END OF BRIDGE BEING PRESENT WITHIN THE CLEAR ZONE.

SEE STD. 862D03 FOR STRUCTURE ANCHOR UNITS.

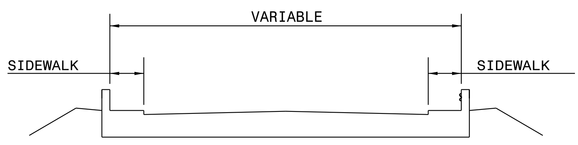


SECTION A-A

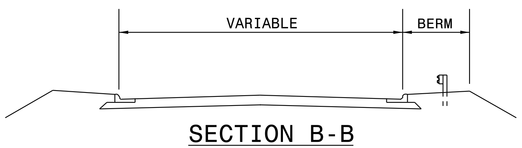


SECTION B-B

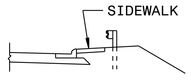


FOR POSTED SPEEDS ≥ 45mph USE GREU TYPE TL-3
FOR POSTED SPEEDS < 45mph USE GREU TYPE TL-2

## STANDARD GUARDRAIL PLACEMENT AT BRIDGES WITH 2'-6" CONCRETE CURB AND GUTTER

SHEET 5 OF 11
**862D01**

STATE OF NORTH CAROLINA
DEPT. OF TRANSPORTATION
DIVISION OF HIGHWAYS
RALEIGH, N.C.

ROADWAY DETAIL DRAWING FOR
**GUARDRAIL PLACEMENT**

SHEET 5 OF 11
**862D01**

**SEE TITLE BLOCK**

ORIGINAL BY: J HOWERTON DATE: 06-22-12
MODIFIED BY: DATE:
CHECKED BY: DATE:
FILE SPEC.:

**CONTRACT STANDARDS AND DEVELOPMENT UNIT**
Office 919-707-6950 FAX 919-250-4119

DOCUMENT NOT CONSIDERED FINAL UNLESS ALL SIGNATURES COMPLETED

PROJECT REFERENCE NO. 17BP.8.R.70
SHEET NO. 2C-3

DocuSign Envelope ID: 00441B04-5690-4BEF-87E2-87BDC84A43AF

04-MAY-2017 15:16
S:\Contracts\Contracts\Special Details\jhowerton\Standard Drawings\2012 Standard Drawings\Details in Lieu of Standards\Division 8\862d01 862d03 862d03\862d01.dgn
jhowerton AT CSD-292595

STATE OF NORTH CAROLINA
DEPT. OF TRANSPORTATION
DIVISION OF HIGHWAYS
RALEIGH, N.C.

ROADWAY DETAIL DRAWING FOR
**GUARDRAIL PLACEMENT**

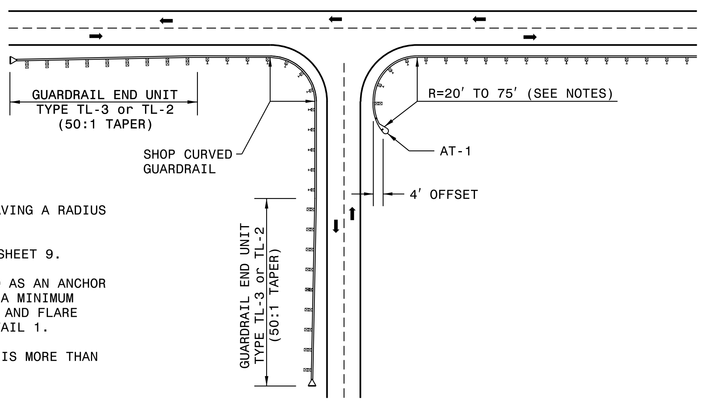


NOTES:

SHOP CURVED GUARDRAIL IS DEFINED AS HAVING A RADIUS OF 150' OR LESS.

WHEN RADIUS IS LESS THAN 20' REFER TO SHEET 9.

WHENEVER SHOP CURVED GUARDRAIL IS USED AS AN ANCHOR AND THE RADIUS IS FROM 20' TO 75', USE A MINIMUM LENGTH OF 50' OF SHOP CURVED GUARDRAIL AND FLARE WITH AN AT-1 ANCHOR UNIT. REFER TO DETAIL 1.

WHENEVER SHOP CURVED GUARDRAIL RADIUS IS MORE THAN 75', REFER TO DETAIL 2.

MAINTAIN CLEAR SIGHT DISTANCE.

FOR POSTED SPEEDS ≥ 45mph USE GREU TYPE TL-3
FOR POSTED SPEEDS < 45mph USE GREU TYPE TL-2

**DETAIL-1**

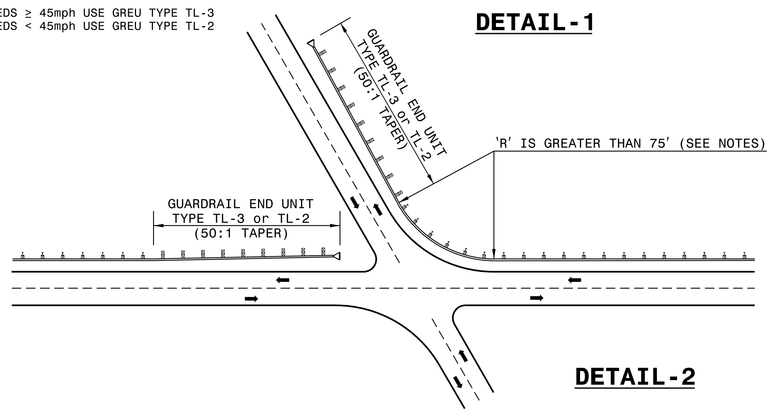


**DETAIL-2**

## GUARDRAIL TREATMENT AT INTERSECTIONS

SHEET 8 OF 11
**862D01**

STATE OF NORTH CAROLINA
DEPT. OF TRANSPORTATION
DIVISION OF HIGHWAYS
RALEIGH, N.C.

ROADWAY DETAIL DRAWING FOR
**GUARDRAIL PLACEMENT**

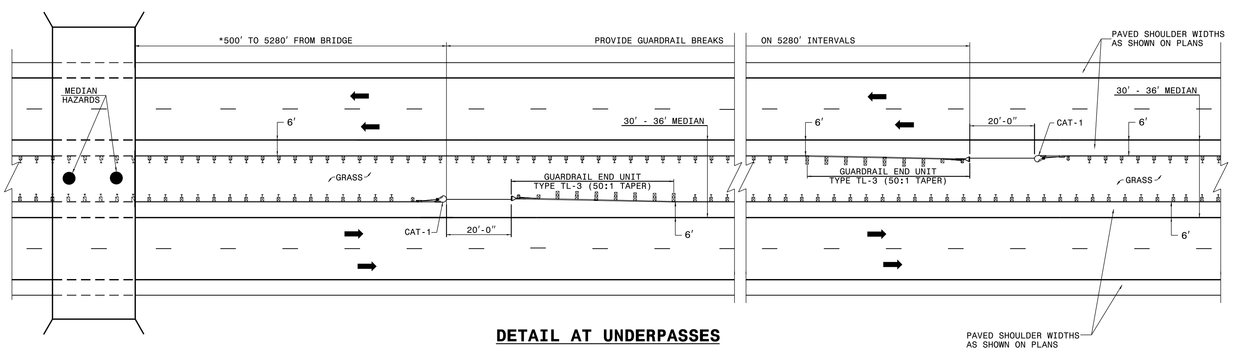


**DETAIL AT UNDERPASSES**

* GUARDRAIL OPENING MAY BE SPACED AS CLOSE AS 350 FT. FROM STRUCTURE IF NECCESSARY TO ALLOW MOWER ACCESS TO MEDIAN

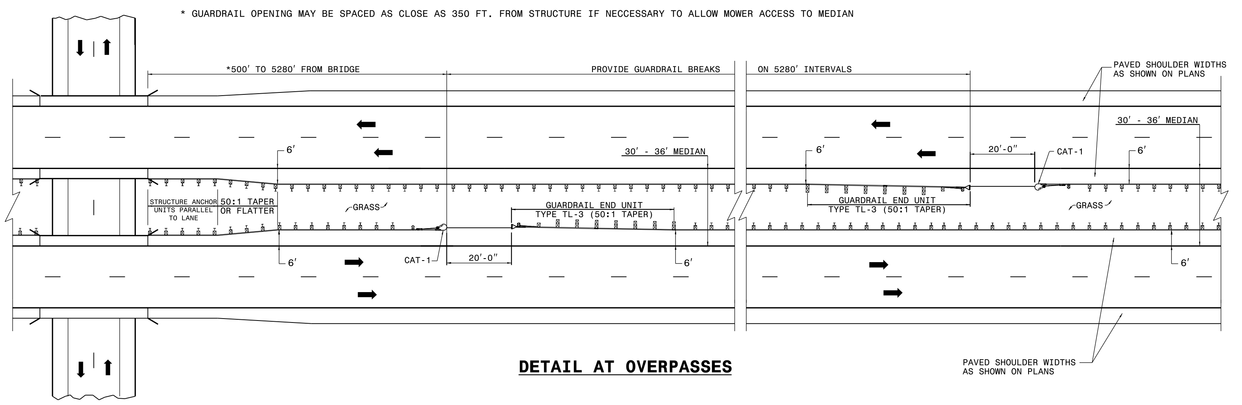


**DETAIL AT OVERPASSES**

FOR POSTED SPEEDS ≥ 45mph USE GREU TYPE TL-3
FOR POSTED SPEEDS < 45mph USE GREU TYPE TL-2

## GUARDRAIL BREAK INTERVALS WITH 30' - 36' MEDIANS

SHEET 7 OF 11
**862D01**

STATE OF NORTH CAROLINA
DEPT. OF TRANSPORTATION
DIVISION OF HIGHWAYS
RALEIGH, N.C.

ROADWAY DETAIL DRAWING FOR
**GUARDRAIL PLACEMENT**

## SEE TITLE BLOCK

CONTRACT STANDARDS AND DEVELOPMENT UNIT
Office 919-707-6950 FAX 919-250-4119

DOCUMENT NOT CONSIDERED FINAL UNLESS ALL SIGNATURES COMPLETED

ORIGINAL BY: J HOWERTON DATE: 06-22-12
MODIFIED BY: _____ DATE: _____
CHECKED BY: _____ DATE: _____
FILE SPEC.: _____

| PROJECT REFERENCE NO. | SHEET NO. |
|---|---|
| 17BP.8.R.70 | 2C-4 |

04-MAY-2017 15:16
S:\Contracts\Contracts\Special Details\jhowerton\Standard Drawings\2012 Standard Drawings\Details in Lieu of Standards\Division 8\862d01 862d03 862d03\862d01.dgn
jhowerton AT CSD-292595

STATE OF NORTH CAROLINA
DEPT. OF TRANSPORTATION
DIVISION OF HIGHWAYS
RALEIGH, N.C.

ENGLISH DETAIL DRAWING FOR
**GUARDRAIL PLACEMENT**

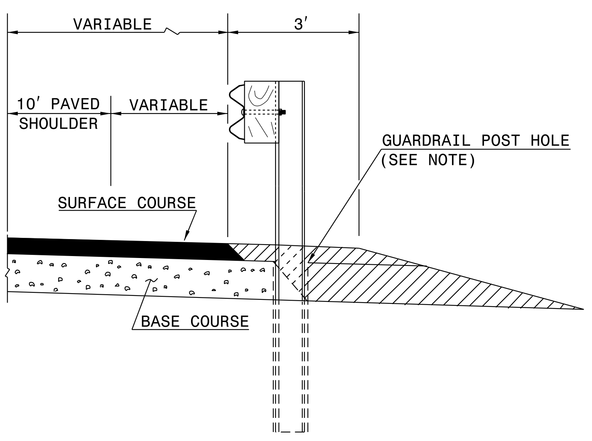


**FLEXIBLE PAVED SHOULDER**

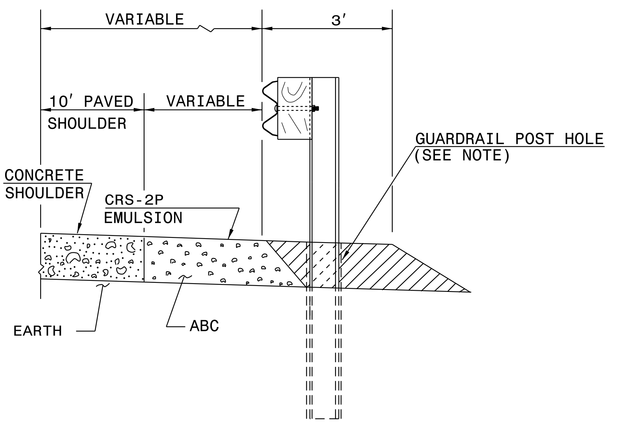


**CONCRETE PAVED SHOULDER**

EARTH MATERIAL

NOTE:
WHEN WOODEN GUARDRAIL POSTS ARE USED, DRILL HOLES THROUGH EARTH MATERIAL AND BASE COURSE.THE POST MAY THEN BE DRIVEN TO THE PROPER DEPTH. DRILL THE HOLE OF SUFFICIENT SIZE TO ACCOMMODATE THE PARTICULAR POST BEING USED. BACKFILL AND TAMP HOLES USING THE EXCAVATED MATERIAL.

SHEET 10 OF 11
**862D01**

STATE OF NORTH CAROLINA
DEPT. OF TRANSPORTATION
DIVISION OF HIGHWAYS
RALEIGH, N.C.

ENGLISH DETAIL DRAWING FOR
**GUARDRAIL PLACEMENT**

SHEET 10 OF 11
**862D01**

STATE OF NORTH CAROLINA
DEPT. OF TRANSPORTATION
DIVISION OF HIGHWAYS
RALEIGH, N.C.

ROADWAY DETAIL DRAWING FOR
**GUARDRAIL PLACEMENT**

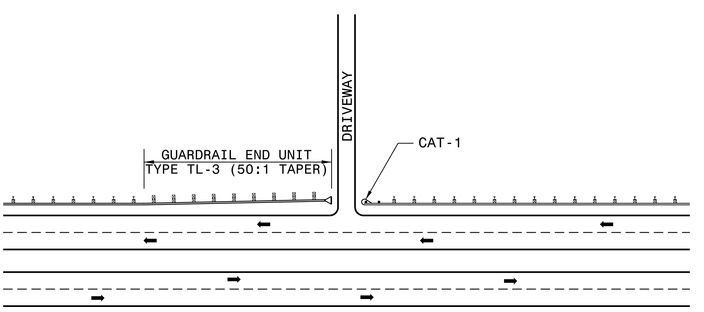


**DETAIL-3**
DIVIDED HIGHWAY

NOTE: USE DETAIL 3 & 4 WHENEVER 20' OR LARGER RADIUS CANNOT BE UTILIZED.

MAINTAIN CLEAR SIGHT DISTANCE.

FOR POSTED SPEEDS ≥ 45mph USE GREU TYPE TL-3
FOR POSTED SPEEDS < 45mph USE GREU TYPE TL-2

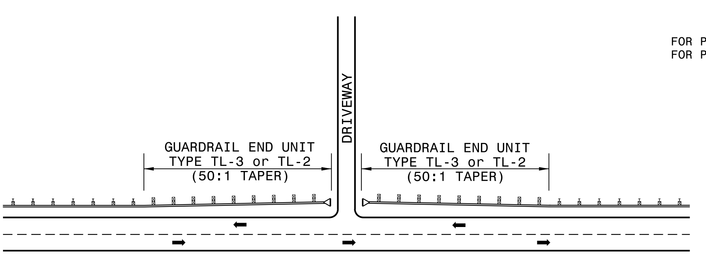


**DETAIL-4**
UNDIVIDED HIGHWAY

## GUARDRAIL TREATMENT AT DRIVEWAYS

SHEET 9 OF 11
**862D01**

STATE OF NORTH CAROLINA
DEPT. OF TRANSPORTATION
DIVISION OF HIGHWAYS
RALEIGH, N.C.

ROADWAY DETAIL DRAWING FOR
**GUARDRAIL PLACEMENT**

SHEET 9 OF 11
**862D01**

**SEE TITLE BLOCK**

ORIGINAL BY: J HOWERTON DATE: 06-22-12
MODIFIED BY: DATE:
CHECKED BY: DATE:
FILE SPEC.:

CONTRACT STANDARDS AND DEVELOPMENT UNIT
Office 919-707-6950 FAX 919-250-4119

DOCUMENT NOT CONSIDERED FINAL UNLESS ALL SIGNATURES COMPLETED

NORTH CAROLINA PROFESSIONAL ENGINEER SEAL 022966 ENGINEER
8/1/2017

PROJECT REFERENCE NO. 17BP.8.R.70
SHEET NO. 2C-5

DocuSign Envelope ID: 004418D4-5690-4BEF-87E2-879DC84A434F

| PROJECT REFERENCE NO. | SHEET NO. |
|---|---|
| 17BP.8.R.70 | 2C-6 |

STATE OF
NORTH CAROLINA
DEPT. OF TRANSPORTATION
DIVISION OF HIGHWAYS
RALEIGH, N.C.

ROADWAY DETAIL DRAWING FOR
**GUARDRAIL PLACEMENT**
GUARDRAIL TREATMENT AT CURB AND GUTTER

SHEET 11 OF 11
**862D01**

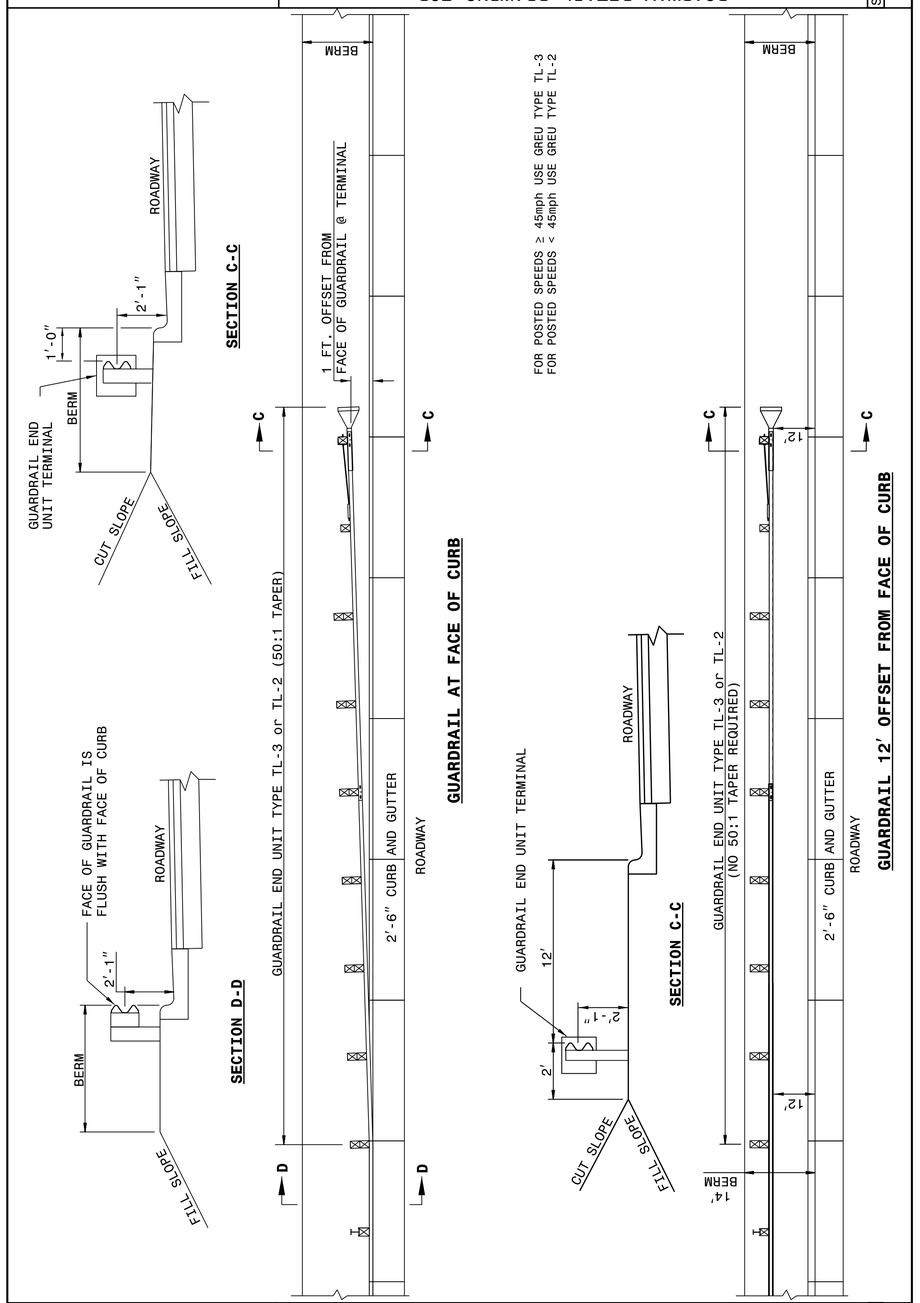


STATE OF
NORTH CAROLINA
DEPT. OF TRANSPORTATION
DIVISION OF HIGHWAYS
RALEIGH, N.C.

ROADWAY DETAIL DRAWING FOR
**GUARDRAIL PLACEMENT**
GUARDRAIL TREATMENT AT CURB AND GUTTER

SHEET 11 OF 11
**862D01**

04-MAY-2017 15:17
S:\Contracts\Special Details\jhowerton\Standard Drawings\2012 Standard Drawings\Details in Lieu of Standards\Division 8\862d01 862d03 862d03\862d01.dgn
jhowerton
ATTCSDP-293595

SEAL
022966
ENGINEER
Joel S. Howerton
8/1/2017

DOCUMENT NOT CONSIDERED FINAL
UNLESS ALL SIGNATURES COMPLETED

**CONTRACT STANDARDS AND DEVELOPMENT UNIT**
Office 919-707-6950 FAX 919-250-4119

**SEE TITLE BLOCK**

ORIGINAL BY: J HOWERTON DATE: 06-22-12
MODIFIED BY: DATE:
CHECKED BY: DATE:
FILE SPEC.:

DocuSign Envelope ID: 004418D4-5690-4BEF-87E2-879DC84A434F

| PROJECT REFERENCE NO. | SHEET NO. |
|---|---|
| 17BP.8.R.70 | 2C-7 |

STATE OF
NORTH CAROLINA
DEPT. OF TRANSPORTATION
DIVISION OF HIGHWAYS
RALEIGH, N.C.

# GUARDRAIL INSTALLATION

ROADWAY DETAIL DRAWING FOR

SHEET 1 OF 8 — 862D02

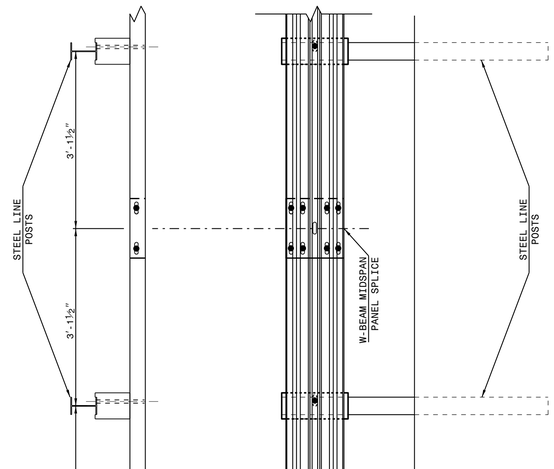


PLAN

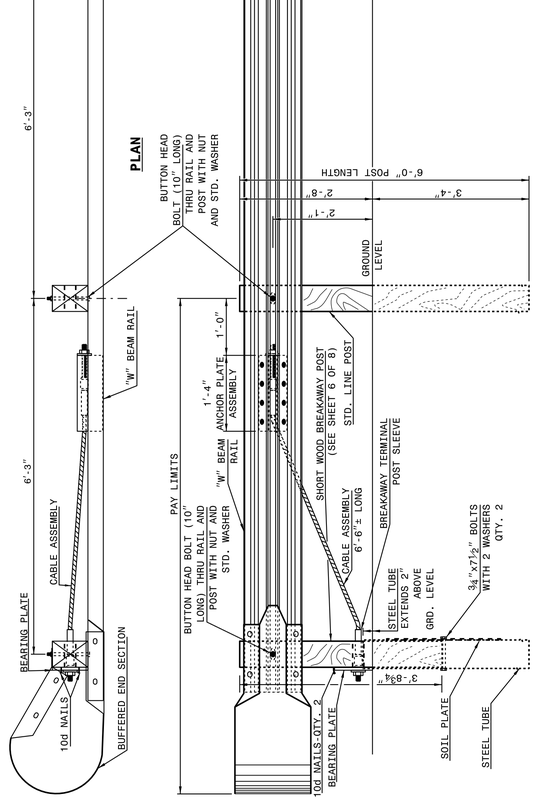


ELEVATION

## TRAILING END UNIT ASSEMBLY

## C.A.T.-1 SYSTEM

**DOCUMENT NOT CONSIDERED FINAL UNLESS ALL SIGNATURES COMPLETED**

**CONTRACT STANDARDS AND DEVELOPMENT UNIT**
Office 919-707-6950 FAX 919-250-4119

**SEE TITLE BLOCK**

| | | | |
|---|---|---|---|
| ORIGINAL BY: | J HOWERTON | DATE: | 06-22-12 |
| MODIFIED BY: | | DATE: | |
| CHECKED BY: | | DATE: | |
| FILE SPEC.: | | | |

STATE OF
NORTH CAROLINA
DEPT. OF TRANSPORTATION
DIVISION OF HIGHWAYS
RALEIGH, N.C.

# GUARDRAIL INSTALLATION

ROADWAY DETAIL DRAWING FOR

SHEET 2 OF 8 — 862D02

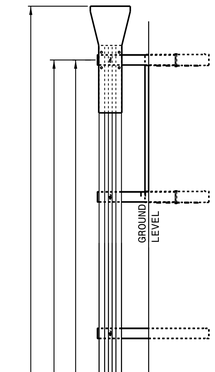


FLARED AND TANGENT
ELEVATION VIEW

* WHEN INSTALLING GUARDRAIL END UNITS THAT ARE 2'-1" MOUNTING HEIGHT TO EXISTING GUARDRAIL, REMOVE THE EXISTING GUARDRAIL TO TRANSITION FROM THE EXISTING HEIGHT TO THE PROPOSED 2'-1" HEIGHT. SEE 862.02, SHEET 4 OF 8 FOR TRANSITION DETAILS.

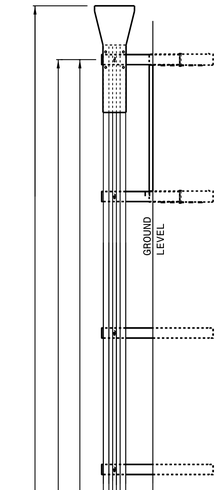


FLARED AND TANGENT
ELEVATION VIEW

## APPROACH END UNITS

STATE OF
NORTH CAROLINA
DEPT. OF TRANSPORTATION
DIVISION OF HIGHWAYS

ROADWAY DETAIL DRAWING FOR
**GUARDRAIL INSTALLATION**

SHEET 2 OF 8 — 862D02

STATE OF
NORTH CAROLINA
DEPT. OF TRANSPORTATION
DIVISION OF HIGHWAYS

ROADWAY DETAIL DRAWING FOR
**GUARDRAIL INSTALLATION**

SHEET 1 OF 8 — 862D02

23-MAY-2017 12:50
S:\Contracts\Special Details\jhowerton\Standard Drawings\2012 Standard Drawings\Details in Lieu of Standards\862d01 862d03 862d03\862d02.dgn
jhowerton AT CSD-242595

DocuSign Envelope ID: 004418D4-5690-4BEF-87E2-879DC84A434F

| PROJECT REFERENCE NO. | SHEET NO. |
|---|---|
| 17BP.8.R.70 | 2C-8 |



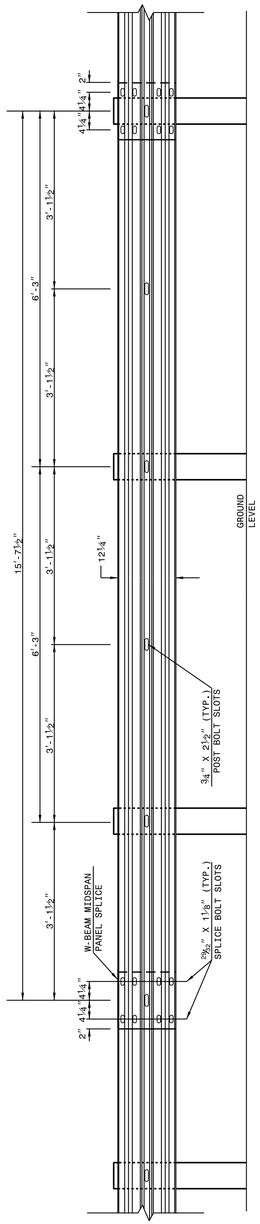


**15'-7½" W-BEAM GUARDRAIL PANEL**

**NOTE:** USE 5 SPACE 15'-7½" W-BEAM GUARDRAIL PANEL AT THE DOWNSTREAM END OF AN END UNIT OR EXISTING GUARDRAIL THAT DOES NOT OFFSET THE W-BEAM PANEL SPLICE TO MIDSPAN





**NOTE: IF EXISTING GUARDRAIL IS LOWER THAN 1'-11", USE AN ADDITIONAL 12'-6" LONG SECTION OF GUARDRAIL, FOR EVERY 1" OF HEIGHT DIFFERENCE, TO TRANSITION FROM EXISTING GUARDRAIL TO PROPOSED 2'-1" GUARDRAIL.**

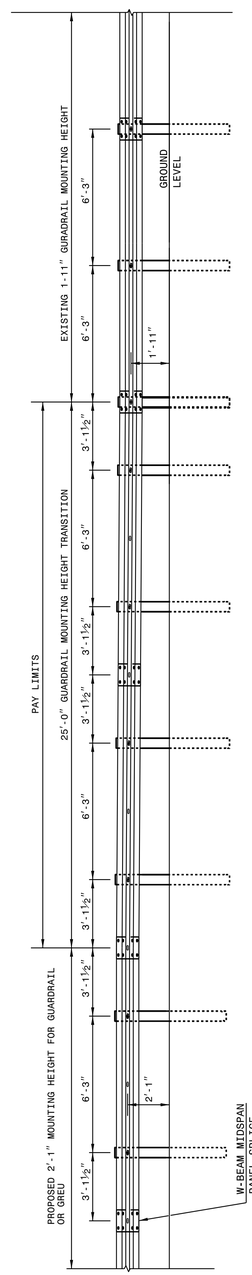


**ELEVATION VIEW**

**TRANSITION FROM OR 1'-11" TO 2'-1" W-BEAM GUARDRAIL MOUNTING HEIGHT**



NORTH CAROLINA PROFESSIONAL SEAL 022966 ENGINEER Joel Howerton
873F3D17DCDC45F...
8/1/2017

DOCUMENT NOT CONSIDERED FINAL UNLESS ALL SIGNATURES COMPLETED

**CONTRACT STANDARDS AND DEVELOPMENT UNIT**
Office 919-707-6950 FAX 919-250-4119

**SEE TITLE BLOCK**

ORIGINAL BY: J HOWERTON DATE: 06-22-12
MODIFIED BY: _____ DATE: _____
CHECKED BY: _____ DATE: _____
FILE SPEC.: _____

17-MAY-2017 07:30
S:\Contracts\Contracts\Special Details\jhowerton\Standard Drawings\2012 Standard Drawings\Details in Lieu of Standards\862d01 862d03 862d03\862d02.dgn
jhowerton AT CSD-292595

04-MAY-2017 15:20
S:\Contracts\Contracts\Special Details\jhowerton\Standard Drawings\2012 Standard Drawings\Details in Lieu of Standards\Division 8\862d01 862d03 862d03\862d02.dgn
jhowerton AT CSD-292595

STATE OF NORTH CAROLINA
DEPT. OF TRANSPORTATION
DIVISION OF HIGHWAYS
RALEIGH, N.C.

ROADWAY DETAIL DRAWING FOR
**GUARDRAIL INSTALLATION**

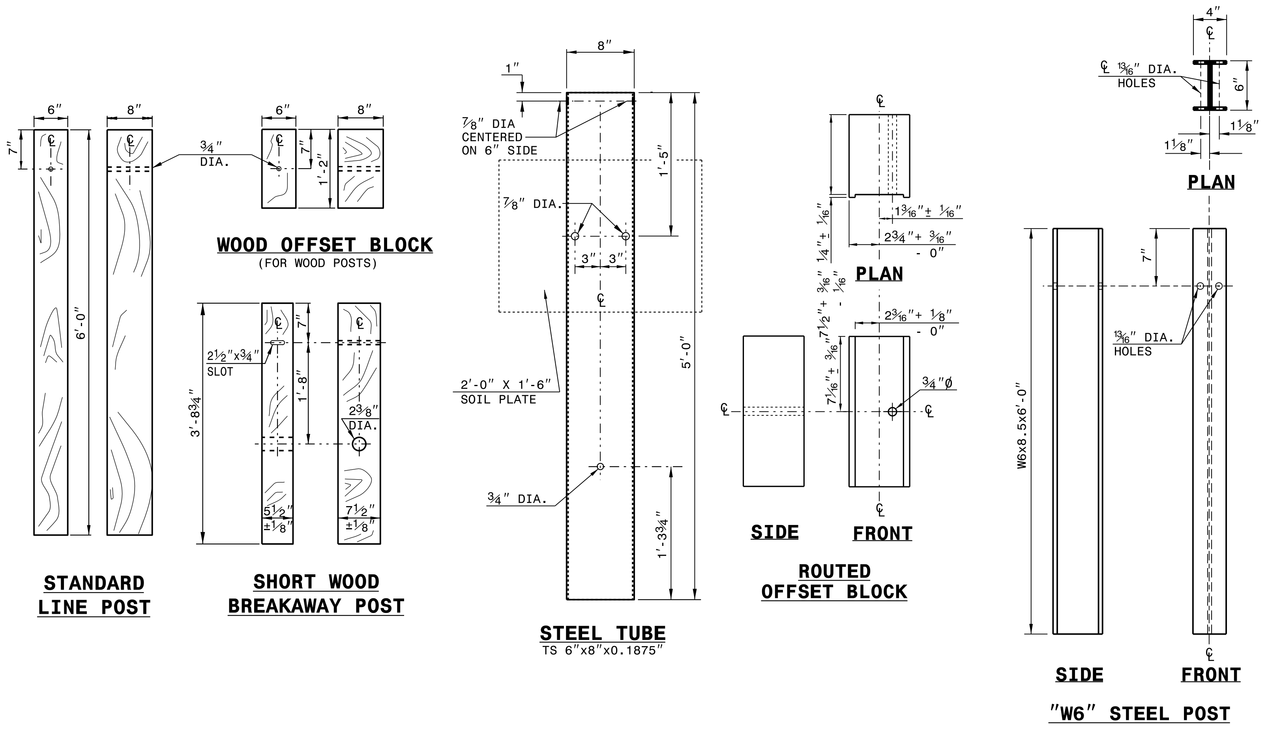


## SYSTEM PARTS

SHEET 6 OF 8
**862D02**

STATE OF NORTH CAROLINA
DEPT. OF TRANSPORTATION
DIVISION OF HIGHWAYS
RALEIGH, N.C.

ROADWAY DETAIL DRAWING FOR
**GUARDRAIL INSTALLATION**

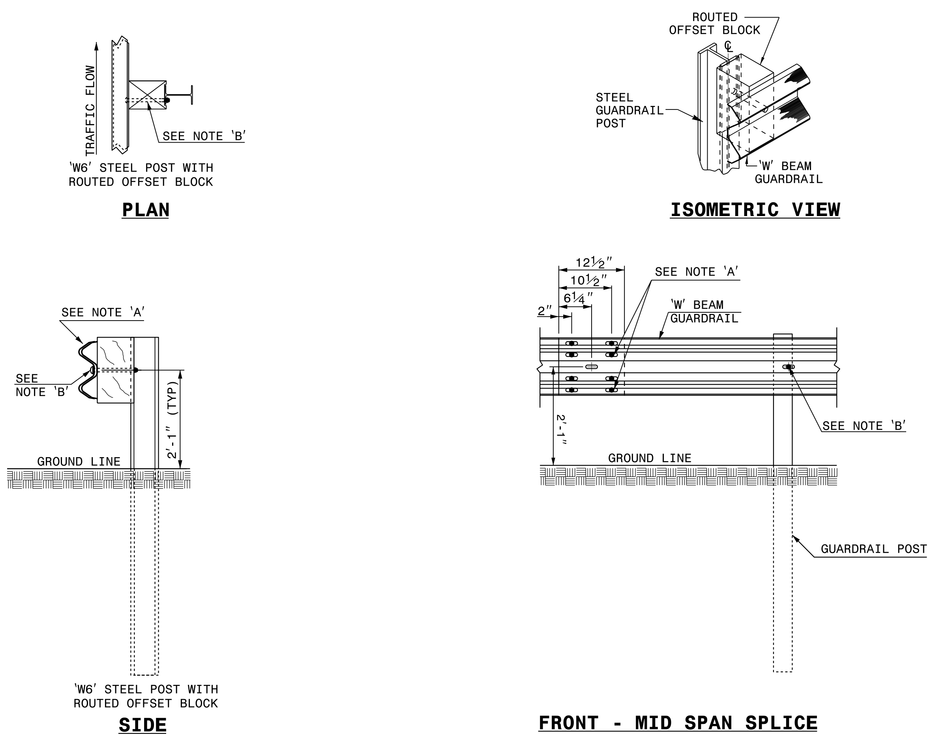


NOTES:
A - 5/8" DIA. BUTTON HEAD SPLICE BOLT 1 1/4" LONG (8 REQ. PER SPLICE JOINT).
B - 5/8" DIA. BUTTON HEAD BOLT 7 1/2"/9" LONG WITH NUT FOR BOLTING 6"/8" ROUTED OFFSET BLOCK TO STEEL POSTS.
C - FIELD PUNCHING OF HOLES INTO GUARDRAIL AS DIRECTED BY THE ENGINEER.

## TYPICAL GUARDRAIL AND GUARDRAIL POST ALTERNATIVES

SHEET 5 OF 8
**862D02**

STATE OF NORTH CAROLINA
DEPT. OF TRANSPORTATION
DIVISION OF HIGHWAYS
RALEIGH, N.C.

ROADWAY DETAIL DRAWING FOR
**GUARDRAIL INSTALLATION**

SHEET 5 OF 8
**862D02**

**SEE TITLE BLOCK**

ORIGINAL BY: J HOWERTON DATE: 06-22-12
MODIFIED BY: DATE:
CHECKED BY: DATE:
FILE SPEC.:

**CONTRACT STANDARDS AND DEVELOPMENT UNIT**
Office 919-707-6950 FAX 919-250-4119

DOCUMENT NOT CONSIDERED FINAL UNLESS ALL SIGNATURES COMPLETED

NORTH CAROLINA PROFESSIONAL ENGINEER SEAL 022966 S. HOWERTON
8/1/2017

PROJECT REFERENCE NO. 17BP.8.R.70
SHEET NO. 2C-9

DocuSign Envelope ID: 004418D4-5690-4BEF-87E2-879DC84A434F

| PROJECT REFERENCE NO. | SHEET NO. |
|---|---|
| 17BP.8.R.70 | 2C-10 |

STATE OF
NORTH CAROLINA
DEPT. OF TRANSPORTATION
DIVISION OF HIGHWAYS
RALEIGH, N.C.

ROADWAY DETAIL DRAWING FOR
# GUARDRAIL INSTALLATION

SHEET 7 OF 8
862D02

## SYSTEM PARTS - GENERAL USE

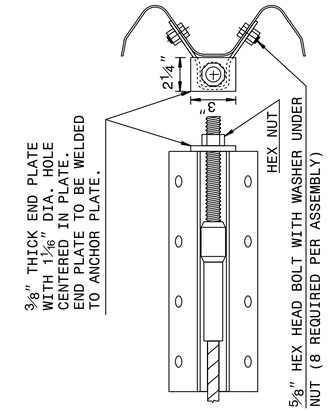


**ANCHOR PLATE ASSEMBLY**

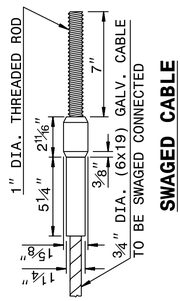


**SWAGED CABLE**

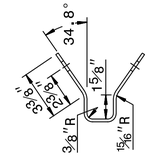


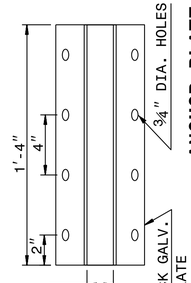


**ANCHOR PLATE**

**CABLE ASSEMBLY**

## SYSTEM PARTS

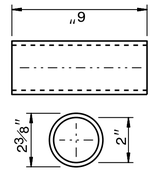


**BREAKAWAY TERMINAL POST SLEEVE**

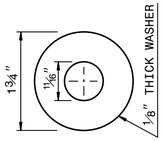


**DETAIL OF STANDARD WASHER**

STANDARD WASHER: TYPICAL USE UNDER NUT WITH WOOD POST

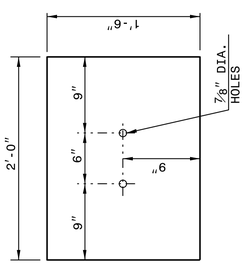


**SOIL PLATE**

1/4" THICK PLATE

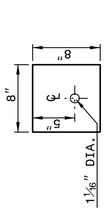


**BEARING PLATE**

5/8" THICK PLATE

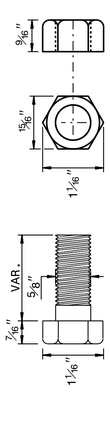


**DETAIL OF STANDARD HEX BOLT AND NUT**

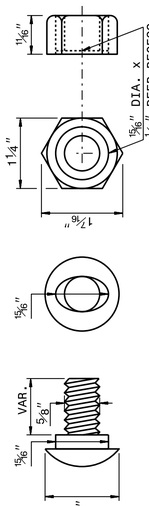


**DETAIL OF BUTTON HEAD BOLT AND NUT**

**SYSTEM PARTS**

NORTH CAROLINA PROFESSIONAL SEAL 022966 ENGINEER Jason Howerton
DocuSigned by: 873F3D17DCDC45F...
8/1/2017

DOCUMENT NOT CONSIDERED FINAL UNLESS ALL SIGNATURES COMPLETED

CONTRACT STANDARDS
AND DEVELOPMENT UNIT
Office 919-707-6950 FAX 919-250-4119

**SEE TITLE BLOCK**

ORIGINAL BY: J HOWERTON DATE: 06-22-12
MODIFIED BY: _____ DATE: _____
CHECKED BY: _____ DATE: _____
FILE SPEC.: _____

STATE OF
NORTH CAROLINA
DEPT. OF TRANSPORTATION
DIVISION OF HIGHWAYS
RALEIGH, N.C.

ROADWAY DETAIL DRAWING FOR
# GUARDRAIL INSTALLATION

SHEET 8 OF 8
862D02

## TYPICAL END SHOE

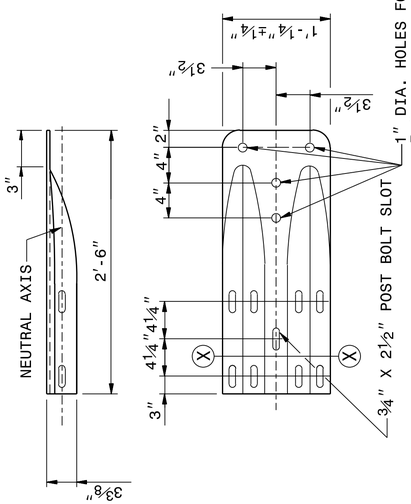


## SECTION X-X

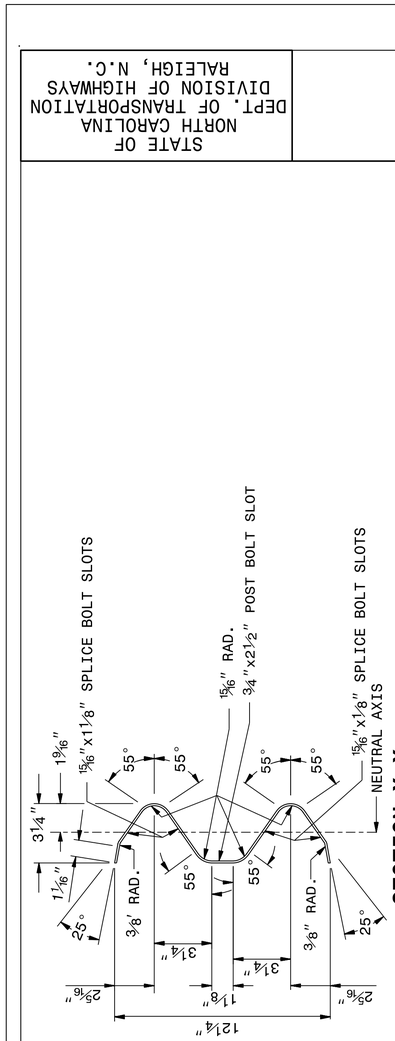


## BUFFERED END SECTION

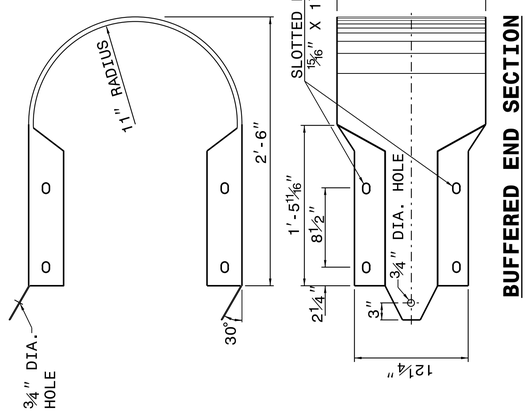


## SYSTEM PARTS - GENERAL USE

STATE OF
NORTH CAROLINA
DEPT. OF TRANSPORTATION
DIVISION OF HIGHWAYS
RALEIGH, N.C.

ROADWAY DETAIL DRAWING FOR
# GUARDRAIL INSTALLATION

SHEET 8 OF 8
862D02

04-MAY-2017 15:21
S:\Contracts\Contracts\Special Details\Jhowerton\Standard Drawings\2012 Standard Drawings\Details in Lieu of Standards\Division 8\862d01 862d03 862d03\862d02.dgn
jhowerton AT CSD-212915

DocuSign Envelope ID: 004418D4-5690-4BEF-87E2-879DC84A434F

| PROJECT REFERENCE NO. | SHEET NO. |
|---|---|
| 17BP.8.R.70 | 2C-11 |

STATE OF
NORTH CAROLINA
DEPT. OF TRANSPORTATION
DIVISION OF HIGHWAYS
RALEIGH, N.C.

ROADWAY DETAIL DRAWING FOR
**STRUCTURE ANCHOR UNITS**
GUARDRAIL ANCHOR UNIT, TYPE III
FOR ATTACHMENT TO RAIL ON BRIDGE

SHEET 1 OF 7
**862D03**

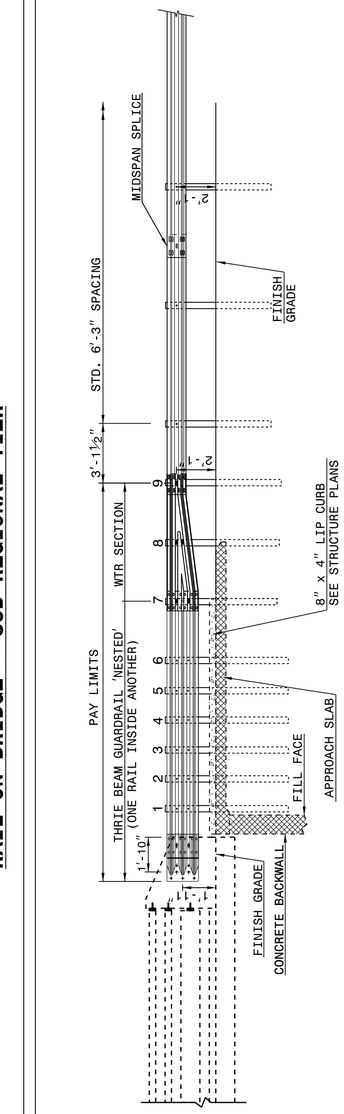


**ELEVATION**

NOTE:
**POST NOT REQUIRED FOR SKEW ANGLES GREATER THAN 150° OR LESS THAN 30° UNLESS OTHERWISE DIRECTED BY THE ENGINEER.
*THE DISTANCE FROM END OF BRIDGE RAIL TO CENTER LINE OF THE FIRST POST SHOULD BE 11½" IF CONCRETE BACKWALL IS NOT PRESENT.
-SHOULDER BERM GUTTER MUST BE INSTALLED TO THE LIMITS 8" x 4" LIP CURB IS SHOWN IF ANCHOR UNIT IS NOT ADJACENT TO AN APPROACH SLAB.
-MEASURE GUARDRAIL HEIGHT FROM THE TOP OF ADJACENT SURFACE (SHOULDER, BERM, OR GUTTER).
-LAP JOINTS IN THE DIRECTION OF TRAFFIC FLOW.
-SEE SHEET 5 FOR POST SECTIONS 1 THRU 9.

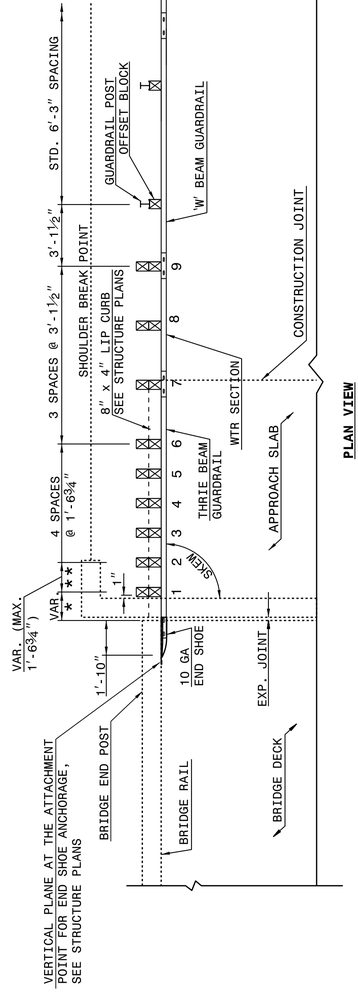


**PLAN VIEW**

**GUARDRAIL ANCHOR UNIT, TYPE III**
**FOR ATTACHMENT TO RAIL ON BRIDGE**

STATE OF
NORTH CAROLINA
DEPT. OF TRANSPORTATION
DIVISION OF HIGHWAYS
RALEIGH, N.C.

ROADWAY DETAIL DRAWING FOR
**STRUCTURE ANCHOR UNITS**
GUARDRAIL ANCHOR UNIT, TYPE III
FOR ATTACHMENT TO RAIL ON BRIDGE
- SUB REGIONAL TIER

SHEET 2 OF 7
**862D03**




**ELEVATION**

NOTE:
**POST NOT REQUIRED FOR SKEW ANGLES GREATER THAN 150° OR LESS THAN 30° UNLESS OTHERWISE DIRECTED BY THE ENGINEER.
*THE DISTANCE FROM END OF BRIDGE RAIL TO CENTER LINE OF THE FIRST POST SHOULD BE 11½" IF CONCRETE BACKWALL IS NOT PRESENT.
-SHOULDER BERM GUTTER MUST BE INSTALLED TO THE LIMITS 8" x 4" LIP CURB IS SHOWN IF ANCHOR UNIT IS NOT ADJACENT TO AN APPROACH SLAB.
-MEASURE GUARDRAIL HEIGHT FROM THE TOP OF ADJACENT SURFACE (SHOULDER, BERM, OR GUTTER).
-LAP JOINTS IN THE DIRECTION OF TRAFFIC FLOW.
-SEE SHEET 5 FOR POST SECTIONS 1 THRU 9.




**PLAN VIEW**

**GUARDRAIL ANCHOR UNIT, TYPE III FOR ATTACHMENT TO RAIL ON BRIDGE - SUB REGIONAL TIER**

STATE OF
NORTH CAROLINA
DEPT. OF TRANSPORTATION
DIVISION OF HIGHWAYS
RALEIGH, N.C.

ROADWAY DETAIL DRAWING FOR
**STRUCTURE ANCHOR UNITS**
GUARDRAIL ANCHOR UNIT, TYPE III
FOR ATTACHMENT TO RAIL ON BRIDGE

SHEET 2 OF 7
**862D03**

NORTH CAROLINA PROFESSIONAL SEAL 022966 ENGINEER Joel Howerton
DocuSigned by: 975F3D17DCDC45F...
8/1/2017

DOCUMENT NOT CONSIDERED FINAL UNLESS ALL SIGNATURES COMPLETED

CONTRACT STANDARDS
AND DEVELOPMENT UNIT
Office 919-707-6950 FAX 919-250-4119

**SEE TITLE BLOCK**

ORIGINAL BY: J HOWERTON DATE: 06-22-12
MODIFIED BY: _____ DATE: _____
CHECKED BY: _____ DATE: _____
FILE SPEC.: _____

23-MAY-2017 12:51
S:\Contracts\Contracts\Special Details\jhowerton\Standard Drawings\2012 Standard Drawings\Details in Lieu of Standards\Division 8\862d01 862d03 862d03\862d03.dgn
jhowerton AT CSD-292595

DocuSign Envelope ID: 004418D4-5690-4BEF-87E2-879DC84A434F

| PROJECT REFERENCE NO. | SHEET NO. |
|---|---|
| 17BP.8.R.70 | 2C-12 |

STATE OF
NORTH CAROLINA
DEPT. OF TRANSPORTATION
DIVISION OF HIGHWAYS
RALEIGH, N.C.

ROADWAY DETAIL DRAWING FOR
**STRUCTURE ANCHOR UNITS**
GUARDRAIL ANCHOR UNIT, TYPE III

SHEET 3 OF 7
**862D03**

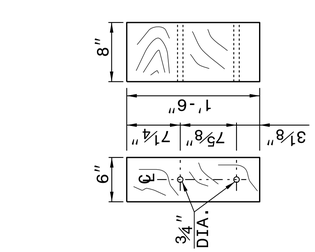


**THRIE BEAM OFFSET BLOCK**

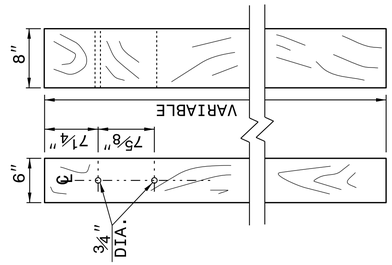


**THRIE BEAM LINE POST**

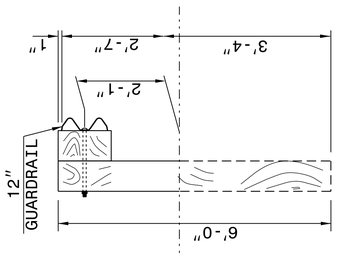


**SECTION OF 'W' BEAM POST 9**

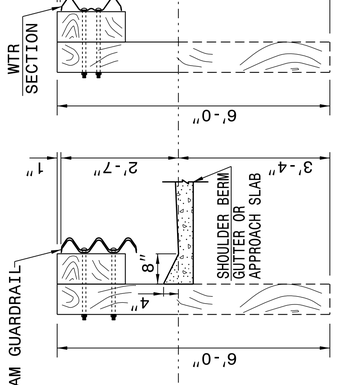


**SECTION OF WTR BEAM POST 8**




**SECTION OF THRIE BEAM POST 7**

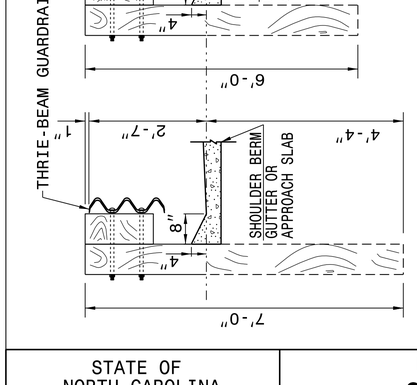


**SECTION OF THRIE BEAM POSTS 1 THRU 6**

NOTE: THE MID POST AND OFFSET BLOCK OF THE WTR SECTION WILL REQUIRE SPECIAL BOLT HOLE DRILLING IN THE THRIE BEAM OFFSET BLOCK AND LINE POST.

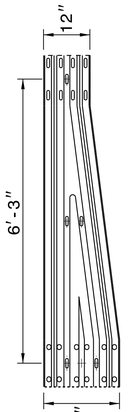


**WTR SECTION**
ELEVATION VIEW

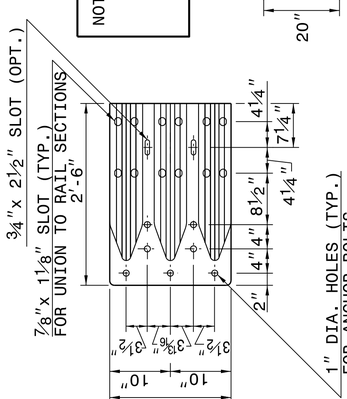


**END SHOE**

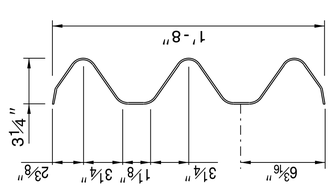


**THRIE-BEAM SECTION**

STATE OF
NORTH CAROLINA
DEPT. OF TRANSPORTATION
DIVISION OF HIGHWAYS
RALEIGH, N.C.

ROADWAY DETAIL DRAWING FOR
**GUARDRAIL ANCHOR UNIT**
GUARDRAIL ANCHOR UNIT TYPE B-77
FOR F-SHAPE BARRIER

SHEET 4 OF 7
**862D03**

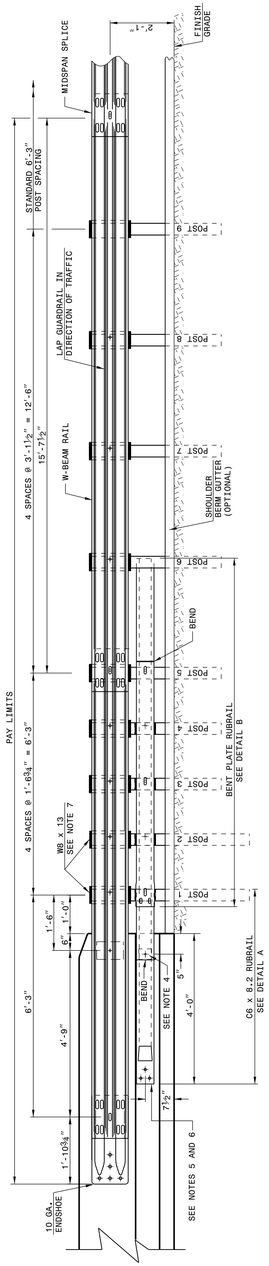


**ELEVATION**

GENERAL NOTES:
1) POSTS 1 THROUGH 5 REQUIRE AN ADDITIONAL HOLE TO ATTACH LOWER BLOCKOUTS AND/OR RUBRAIL.
2) RUBRAIL BLOCKOUTS LOCATED ON POSTS 1 THROUGH 4 ARE OFFSET DRILLED AND SECURED WITH ⅝" BUTTONHEAD BOLTS (SEE CHART FOR BOLT LENGTHS). SECURE BLOCKS ONLY TO POSTS 2 AND 4. SECURE RUBRAIL AND BLOCKOUTS TO POSTS 1 AND 3. RUBRAIL IS SECURED WITH A ⅝" x 4½" BUTTONHEAD BOLT.
3) ⅝" x 4½" BUTTONHEAD BOLT. RUBRAIL IS FLARED TO BACK OF POST 6 AND NOT SECURED.
4) STEEL SPACER TUBE IS A SCHEDULE 40 GALVANIZED PIPE 8 ⅛" INSIDE DIAMETER x 9" LONG. ATTACH TUBE TO RAIL ELEMENT ONLY. USE ⅜" x 3" BUTTONHEAD BOLT AND FLANGE NUT TO SECURE TUBE TO RAIL ELEMENT.
5) SEE DETAIL D FOR SLOPED RUBRAIL BLOCKOUT. BLOCKOUT IS ATTACHED TO RAIL ELEMENT ONLY. USE ⅜" x 3" LAG BOLT WITH FLAT WASHER. SHOP FABRICATE THE C6 x 8.2 RUBRAIL END TO BE CONSISTENT WITH THE SLOPE OF THE F SHAPE AND ATTACH FLUSH WITH THE SLOPED TOE OF THE BARRIER OR BRIDGE RAIL.
6) ANCHORED BY:
   (a) AT EXISTING BRIDGE RAIL AND NEW OR EXISTING BARRIERS, ANCHOR RUBRAIL USING THREE ⅝" x 6" CHEMICALLY ANCHORED BOLTS WITH WASHERS. MAXIMUM PROJECTION FOR BOLTS IS ½".
   (b) AT EXISTING BRIDGE RAIL AND NEW OR EXISTING BARRIERS, ANCHOR THE W-BEAM END SHOE USING A 4 BOLT HOLD DOWN PLATE (SEE STD. DWG. 862.04). A BOLT INSERT ASSEMBLY IS ALLOWED ON PRECAST REINFORCED CONCRETE BARRIER (SEE STD. DWG. 857.01). INSTALL THE W-BEAM END SHOE BEHIND THE RECTANGULAR RUBRAIL BLOCKOUT.
   (c) AT NEW BRIDGE RAIL, ANCHOR THE W-BEAM END SHOE AND RUBRAIL AS DETAILED ON THE STRUCTURE PLANS.
7) POSTS 1 AND 2 ARE W6 x 13, 7'-6" LONG. ALL OTHER POSTS IN THE ANCHOR UNIT ARE W6 x 8.5.

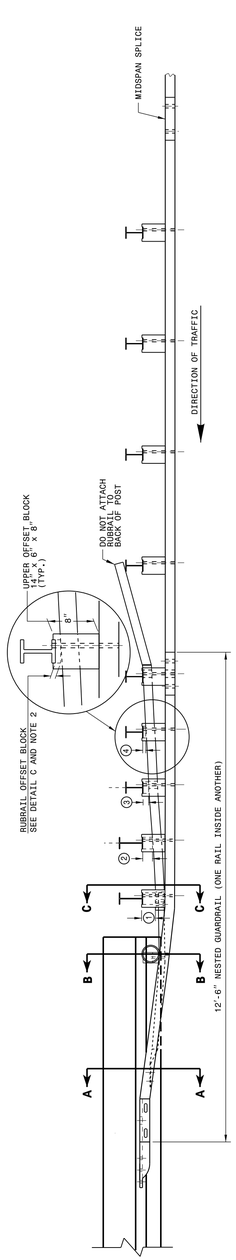


**PLAN**

**GUARDRAIL ANCHOR UNIT TYPE B-77**

STATE OF
NORTH CAROLINA
DEPT. OF TRANSPORTATION
DIVISION OF HIGHWAYS
RALEIGH, N.C.

ROADWAY DETAIL DRAWING FOR
**GUARDRAIL ANCHOR UNIT**
GUARDRAIL ANCHOR UNIT TYPE B-77
FOR F-SHAPE BARRIER

SHEET 4 OF 7
**862D03**

DOCUMENT NOT CONSIDERED FINAL
UNLESS ALL SIGNATURES COMPLETED

**CONTRACT STANDARDS AND DEVELOPMENT UNIT**
Office 919-707-6950 FAX 919-250-4119

**SEE TITLE BLOCK**

ORIGINAL BY: J HOWERTON DATE: 06-22-12
MODIFIED BY: DATE:
CHECKED BY: DATE:
FILE SPEC.:

NORTH CAROLINA PROFESSIONAL SEAL 022966 ENGINEER Joel Howerton
573F3D17DCDCC45F...
8/1/2017

23-MAY-2017 12:52
S:\Contracts\Special Details\jhowerton\Standard Drawings\2012 Standard Drawings\Details in Lieu of Standards\Division 8\862d01 862d03 862d03\862d03.dgn
jhowerton AT CSD-292995

DocuSign Envelope ID: 004418D4-5690-4BEF-87E2-879DC84A434F

| PROJECT REFERENCE NO. | SHEET NO. |
|---|---|
| 17BP.8.R.70 | 2C-13 |

STATE OF
NORTH CAROLINA
DEPT. OF TRANSPORTATION
DIVISION OF HIGHWAYS
RALEIGH, N.C.

ROADWAY DETAIL DRAWING FOR
**STRUCTURE ANCHOR UNITS**
GUARDRAIL ANCHOR UNIT TYPE B-83

SHEET 6 OF 7
**862D03**

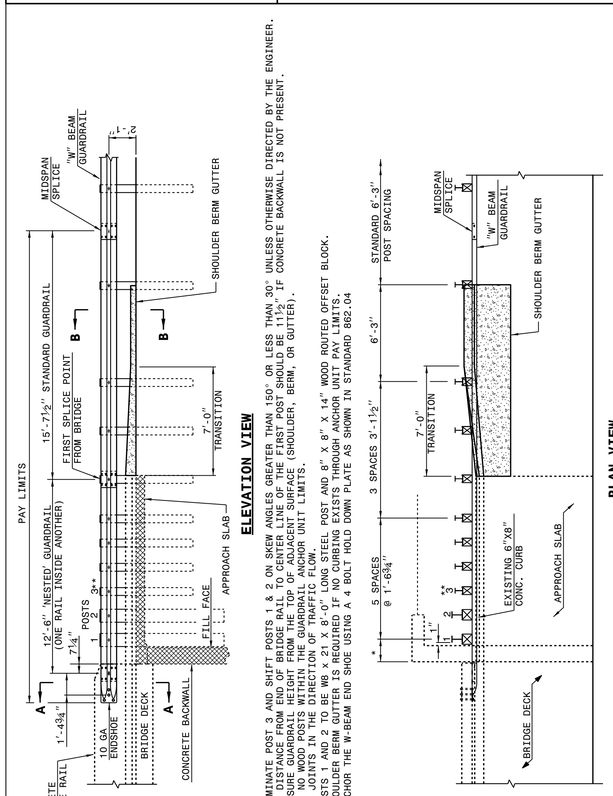


NOTE:
* ELIMINATE POST 3 AND SHIFT POSTS 1 & 2 ON SKEW ANGLES GREATER THAN 150° OR LESS THAN 30° UNLESS OTHERWISE DIRECTED BY THE ENGINEER.
* THE DISTANCE FROM END OF BRIDGE RAIL TO CENTER LINE OF THE FIRST POST SHOULD BE 11½" IF CONCRETE BACKWALL IS NOT PRESENT.
- MEASURE GUARDRAIL HEIGHT FROM TOP OF ADJACENT SURFACE (SHOULDER, BERM, OR GUTTER).
- USE 50 POSTS WITHIN THE GUARDRAIL ANCHOR UNIT LIMITS.
- LAP JOINTS IN THE DIRECTION OF TRAFFIC FLOW.
- POSTS 1 AND 2 TO BE W8 X 21 X 8'-0" LONG STEEL POST AND 8" X 14" WOOD ROUTED OFFSET BLOCK.
- SHOULDER BERM GUTTER IS REQUIRED IF NO CURBING EXISTS THROUGH ANCHOR UNIT PAY LIMITS.
- ANCHOR THE W-BEAM END SHOE USING A 4 BOLT HOLD DOWN PLATE AS SHOWN IN STANDARD 862.04

## GUARDRAIL ANCHOR UNIT TYPE B-83




## GUARDRAIL ANCHOR UNIT TYPE B-83

STATE OF
NORTH CAROLINA
DEPT. OF TRANSPORTATION
DIVISION OF HIGHWAYS
RALEIGH, N.C.

ROADWAY DETAIL DRAWING FOR
**STRUCTURE ANCHOR UNIT**
GUARDRAIL ANCHOR UNIT TYPE B-77
FOR F-SHAPE BARRIER

SHEET 5 OF 7
**862D03**

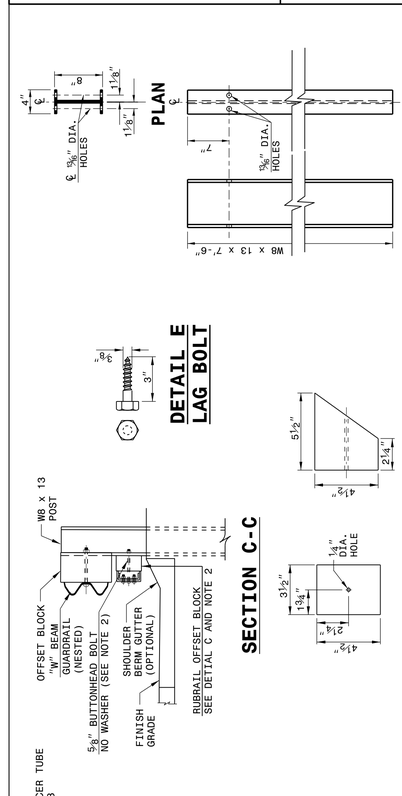


## GUARDRAIL ANCHOR UNIT TYPE B-77

STATE OF
NORTH CAROLINA
DEPT. OF TRANSPORTATION
DIVISION OF HIGHWAYS
RALEIGH, N.C.

ROADWAY DETAIL DRAWING FOR
**STRUCTURE ANCHOR UNITS**
GUARDRAIL ANCHOR UNIT TYPE B-83

SHEET 6 OF 7
**862D03**

04-MAY-2017 14:54
S:\Contracts\Contracts\Special Details\jhowerton\Standard Drawings\2012 Standard Drawings\Details in Lieu of Standards\Division 8\862d01 862d03 862d03\862d03.dgn
jhowerton AT CSD-219595

NORTH CAROLINA
PROFESSIONAL
SEAL
022966
ENGINEER
Jared Southerland
873F3D17DCDC45F...
8/1/2017

DOCUMENT NOT CONSIDERED FINAL UNLESS ALL SIGNATURES COMPLETED

CONTRACT STANDARDS AND DEVELOPMENT UNIT
Office 919-707-6950 FAX 919-250-4119

**SEE TITLE BLOCK**

ORIGINAL BY: J HOWERTON DATE: 06-22-12
MODIFIED BY: _____ DATE: _____
CHECKED BY: _____ DATE: _____
FILE SPEC.: _____

04-MAY-2017 14:55
S:\Contracts\Contracts\Special Details\jhowerton\Standard Drawings\2012 Standard Drawings\Details in Lieu of Standards\Division 8\862d01 862d03 862d03\862d03.dgn
jhowerton AT CSD-292595

DocuSign Envelope ID: 00441B04-5690-4BEF-87E2-879DC84A43AF

STATE OF
NORTH CAROLINA
DEPT. OF TRANSPORTATION
DIVISION OF HIGHWAYS
RALEIGH, N.C.

ROADWAY DETAIL DRAWING FOR
**STRUCTURE ANCHOR UNITS**
ANCHORAGE FOR GUARDRAIL POST ON BOX CULVERT

SHEET 7 OF 7
**862D03**

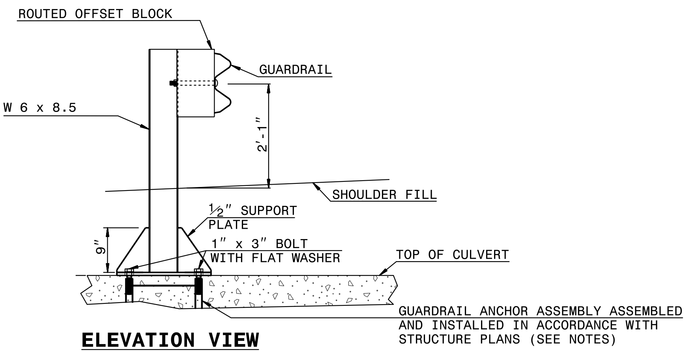


**ELEVATION VIEW**

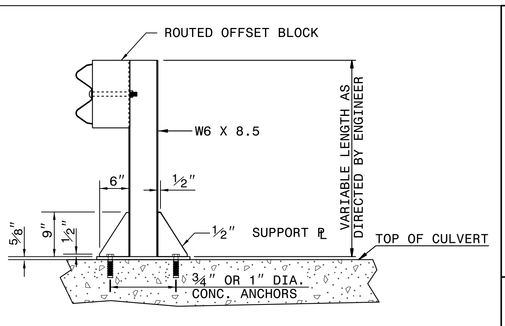


**ELEVATION VIEW**

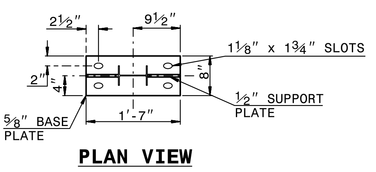


**PLAN VIEW**

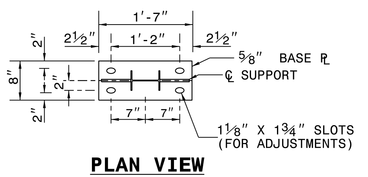


**PLAN VIEW**

NOTES FOR:
GUARDRAIL POST ANCHORED TO STRUCTURE:
- -USE FULL LENGTH ¼" BUTT WELDS AT ALL LOCATIONS OF CONTACT BETWEEN THE BASE PLATE, SUPPORT PLATES AND STEEL POST.
- -USE POST AND POST BASE PLATES CONFORMING TO THE REQUIREMENTS OF A.S.T.M. A-36 AND GALVANIZED AFTER FABRICATION TO CONFORM TO A.S.T.M. A-123.

NEW STRUCTURES:
- -ATTACH POST TO INSERT ASSEMBLY UNITS (USING ANCHOR BOLTS SUPPLIED WITH INSERTS) WHICH HAVE BEEN CAST INTO THE STRUCTURE DURING CONSTRUCTION.

EXISTING STRUCTURES:
- -USE CONCRETE ANCHORS CONSISTING OF A STUD BOLT WITH NUT AND WASHER. USE STUDS THREADED ON ONE END AND HAVING AN EXPANDED WEDGE ASSEMBLY POSITIONED AROUND A TAPERED AREA AT THE OTHER END. USE ANCHORS WHICH PROVIDE A MINIMUM SAFE HOLDING POWER OF 2875 LBS. FOR A ¾" OR 1" DIAMETER BOLT. CALCULATE HOLDING POWER BASED ON ¼ THE ACTUAL HOLDING POWER OF THE ANCHOR IN 3500 PSI CONCRETE AS DETERMINED BY AN APPROVED COMMERCIAL TESTING LABORATORY.

- -USE ANCHORS GALVANIZED IN ACCORDANCE WITH A.S.T.M. A-153. SIZE HOLES FOR THE CONCRETE ANCHORS IN ACCORDANCE WITH THE ANCHOR MANUFACTURER'S RECOMMENDATIONS. DRILL HOLES WITH A CARBIDE OR DIAMOND TIPPED MASONRY BIT POWERED BY A ROTARY OR ROTARY IMPACT DRILL. NO OTHER IMPACT TOOLS WILL BE PERMITTED. DRILL HOLES VERTICALLY. FURNISH DOCUMENTATION OF HOLE SIZE RECOMMENDED FOR THE SPECIFIED ANCHOR TO THE ENGINEER BEFORE DRILLING HOLES. THOROUGHLY CLEAN HOLES FOR ANCHORS OF ALL CONCRETE CHIPS, DUST, GREASE, OIL, ETC. BEFORE ANCHORS ARE INSTALLED. REPAIR ALL DAMAGE CAUSED BY THIS WORK TO THE SATISFACTION OF THE ENGINEER.

## ANCHORAGE FOR GUARDRAIL POST ON BOX CULVERT

STATE OF
NORTH CAROLINA
DEPT. OF TRANSPORTATION
DIVISION OF HIGHWAYS
RALEIGH, N.C.

ROADWAY DETAIL DRAWING FOR
**STRUCTURE ANCHOR UNITS**
ANCHORAGE FOR GUARDRAIL POST ON BOX CULVERT

SHEET 7 OF 7
**862D03**

**CONTRACT STANDARDS AND DEVELOPMENT UNIT**
Office 919-707-6950 FAX 919-250-4119

**DOCUMENT NOT CONSIDERED FINAL UNLESS ALL SIGNATURES COMPLETED**

**SEE TITLE BLOCK**

ORIGINAL BY: J. HOWERTON DATE: 06-22-12
MODIFIED BY: DATE:
CHECKED BY: DATE:
FILE SPEC.:

NORTH CAROLINA PROFESSIONAL ENGINEER SEAL 022966 JAMES R. KEITH

8/1/2017

| PROJECT REFERENCE NO. | SHEET NO. |
|---|---|
| 17BP.8.R.70 | 2C-14 |

6/2/99

STATE OF NORTH CAROLINA
DIVISION OF HIGHWAYS

| PROJECT REFERENCE NO. | SHEET NO. |
|---|---|
| 17BP.8.R.70 | 3B-1 |

## SUMMARY OF EARTHWORK

| STATION | STATION | UNCL. EXCAV. | EMBANK. +% | BORROW | WASTE |
|---|---|---|---|---|---|
| | | | | | |
| 11+10.00 | 12+88.75 | 171 | 412 | 241 | |
| 14+56.25 | 17+10.00 | 39 | 751 | 712 | |
| | | | | | |
| | | | | | |
| | | | | | |
| TOTAL: | | 210 | 1,163 | 953 | |
| | | | | | |
| MATERIAL FOR SHOULDER CONSTRUCTION | | | 131 | 131 | |
| | | | | | |
| | | | | | |
| | | | | | |
| PROJECT TOTAL: | | 210 | 1,294 | 1,084 | |
| EST. 5% TO REPLACE TOP SOIL ON BORROW PIT | | | | 54 | |
| | | | | | |
| GRAND TOTALS: | | 210 | 1,294 | 1,138 | |
| | | | | | |
| SAY: | | 225 | | 1,150 | |

Earthwork quantities are calculated by the Roadway Design Unit. These earthwork quantities are based in part on subsurface data provided by the Geotechnical Engineering Unit.

Note: Approximate quantities only. Unclassified Excavation, Borrow Excavation, Shoulder Borrow, Fine Grading, Clearing and Grubbing, and Removal of Asphalt Pavement will be paid for at the contract lump sum price for grading.

## PAVEMENT REMOVAL SUMMARY

| SURVEY LINE | STATION | STATION | LOCATION LT/RT/CL | $YD^2$ |
|---|---|---|---|---|
| | | | | |
| –L– | 12+00 | 12+95 | CL | 211 |
| –L– | 14+45 | 15+50 | CL | 233 |
| | | | | |
| | | | | |
| | | | | |
| | | | | |
| | | | TOTAL: | 444 |
| | | | | |
| | | | SAY: | 450 |

## SHOULDER BERM GUTTER SUMMARY

| SURVEY LINE | STATION | STATION | LENGTH |
|---|---|---|---|
| | | | |
| –L– (LT) | 14+67.13 | 16+00 | 132.87 |
| –L– (RT) | 14+67.13 | 16+00 | 132.87 |
| | | | |
| | | | |
| | | TOTAL: | 265.74 |
| | | | |
| | | SAY: | 266 |

"N" = DISTANCE FROM EDGE OF LANE TO FACE OF GUARDRAIL.
TOTAL SHOULDER WIDTH = DISTANCE FROM EDGE OF TRAVEL LANE TO SHOULDER BREAK POINT.
FLARE LENGTH = DISTANCE FROM LAST SECTION OF PARALLEL GUARDRAIL TO END OF GUARDRAIL.
W = TOTAL WIDTH OF FLARE FROM BEGINNING OF TAPER TO END OF GUARDRAIL.
G = GATING IMPACT ATTENUATOR TYPE 350
NG = NON-GATING IMPACT ATTENUATOR TYPE 350

## GUARDRAIL SUMMARY

| SURVEY LINE | BEG. STA. | END STA. | LOCATION | LENGTH | | | WARRANT POINT | | "N" DIST. FROM E.O.L. | TOTAL SHOUL. WIDTH | FLARE LENGTH | | W | | ANCHORS | | | | | | | | IMPACT ATTENUATOR TYPE 350 | | | SINGLE FACED GUARDRAIL | REMOVE EXISTING GUARDRAIL | REMOVE AND STOCKPILE EXISTING GUARDRAIL | REMARKS |
|---|---|---|---|---|---|---|---|---|---|---|---|---|---|---|---|---|---|---|---|---|---|---|---|---|---|---|---|---|
| | | | | STRAIGHT | SHOP CURVED | DOUBLE FACED | APPROACH END | TRAILING END | | | APPROACH END | TRAILING END | APPROACH END | TRAILING END | TYPE III | XI | GREU TL-3 | M-350 | XIII | CAT-1 | VI MOD | BIC | AT-1 | EA | G | NG | | | | |
| –L– | 11+82.50 | 12+88.75 | LT | 106.25 | | | | | | | | | | | 1 | | 1 | | | | | | | | | | | | |
| –L– | 11+82.50 | 12+88.75 | RT | 106.25 | | | | | | | | | | | 1 | | 1 | | | | | | | | | | | | |
| –L– | 14+56.25 | 16+50 | LT | 193.75 | | | | | | | | | | | 1 | | 1 | | | | | | | | | | | | |
| –L– | 14+56.25 | 16+50 | RT | 193.75 | | | | | | | | | | | 1 | | 1 | | | | | | | | | | | | |
| | | | | | | | | | | | | | | | | | | | | | | | | | | | | | |
| TOTAL | | | TOTAL | 600.00 | | | | | | | | | | | 4 | | 4 | | | | | | | | | | | | |
| | LESS ANCHOR UNIT – TYPE III – 4 @ 18.75 | | | –75 | | | | | | | | | | | | | | | | | | | | | | | | | |
| | LESS ANCHOR UNIT – GREU TL-3 – 4 @ 50 | | | –200 | | | | | | | | | | | | | | | | | | | | | | | | | |
| | | | SAY | 325.00 | | | ADDITIONAL GUARDRAIL POSTS 5 EACH | | | | | | | | 4 | | 4 | | | | | | | | | | | | |

7/31/2017
R:\Roadway\Proj\7502121-rdy_psh03.dgn

COMPUTED BY:________________ DATE:______________
CHECKED BY:________________ DATE:______________

STATE OF NORTH CAROLINA
DIVISION OF HIGHWAYS

| PROJECT REFERENCE NO. | SHEET NO. |
|---|---|
| 17BP.8.R.70 | 3D-1 |

# *LIST OF PIPES, ENDWALLS, ETC. (FOR PIPES 48" & UNDER)*

NOTE: Invert Elevations are for Bid Purposes only and shall not be used for project construction stakeout.
See "Standard Specifications For Roads and Structures, Section 300–5".

| STATION | LOCATION (LT,RT, OR CL) | STRUCTURE NO. FROM | STRUCTURE NO. TO | TOP ELEVATION | INVERT ELEVATION | INVERT ELEVATION | SLOPE CRITICAL | DRAINAGE PIPE (RCP, CSP, CAAP, HDPE, or PVC) 12" | 15" | 18" | 24" | 30" | 36" | 42" | 48" | DO NOT USE RCP | DO NOT USE CSP | DO NOT USE CAAP | DO NOT USE HDPE |
|---|---|---|---|---|---|---|---|---|---|---|---|---|---|---|---|---|---|---|---|
| 14+71 -L- | LT | 401 | | 448.6 | 445.9 | | | | | | | | | | | | | | |
| 14+71 -L- | LT | 401 | 402 | | 445.9 | 445.2 | | | | | | | | | | | | | |
| 15+25 -L- | LT | 402 | | 448.3 | 445.2 | | | | | | | | | | | | | | |
| 15+25 -L- | LT | 402 | 404 | | 445.2 | 444.9 | | | | | | | | | | | | | |
| 14+71 -L- | RT | 403 | | 448.6 | 445.9 | | | | | | | | | | | | | | |
| 14+71 -L- | RT | 403 | 404 | | 445.9 | 444.9 | | | | | | | | | | | | | |
| 15+25 -L- | RT | 404 | | 448.3 | 444.9 | | | | | | | | | | | | | | |
| 15+25 -L- | RT | 404 | 405 | | 444.9 | 435.9 | | | | 36 | | | | | | | X | | | |
| | | | | | | | | | | | | | | | | | | | |
| TOTAL | | | | | | | | | | 36 | | | | | | | | | | |

| STATION | C.S. PIPE 12" .064 | 15" .064 | 18" .064 | 24" .064 | 36" .079 | 42" .109 | 48" .109 | R.C. PIPE (CLASS III) 15" | 18" | 24" | 30" | 36" | 42" | 48" | R.C. PIPE (CLASS IV) 12" | 15" | 18" | 24" | 30" | 36" | 42" | 48" |
|---|---|---|---|---|---|---|---|---|---|---|---|---|---|---|---|---|---|---|---|---|---|---|
| 14+71 -L- | | | | | | | | | | | | | | | | | | | | | | |
| 14+71 -L- | | | | | | | | | | | | | | | | 52 | | | | | | |
| 15+25 -L- | | | | | | | | | | | | | | | | | | | | | | |
| 15+25 -L- | | | | | | | | | | | | | | | | | 28 | | | | | |
| 14+71 -L- | | | | | | | | | | | | | | | | | | | | | | |
| 14+71 -L- | | | | | | | | | | | | | | | | 52 | | | | | | |
| 15+25 -L- | | | | | | | | | | | | | | | | | | | | | | |
| 15+25 -L- | | | | | | | | | | | | | | | | | | | | | | |
| | | | | | | | | | | | | | | | | | | | | | | |
| TOTAL | | | | | | | | | | | | | | | | 104 | 28 | | | | | |

| STATION | **" R. C. PIPE (CLASS V) | **" R. C. PIPE CULVERTS, CONTRACTOR DESIGN PIPE | **" R. C. PIPE CULVERTS, CONTRACTOR DESIGN PIPE | 15" SIDE DRAIN PIPE | 18" SIDE DRAIN PIPE | ENDWALLS STD. 838.01, STD. 838.11 OR STD. 838.80 (UNLESS NOTED OTHERWISE) CU. YDS. R.C.P. | C.S.P. | QUANTITIES FOR DRAINAGE STRUCTURES (* TOTAL L.F. FOR PAY QUANTITY SHALL BE COL. 'A' + (1.3 X COL.'B')) PER EACH (0' THRU 5.0') | LIN. *FT. A 5.0' THRU 10.0' | B 10.0' AND ABOVE | C.B. STD. 840.01 OR STD. 840.02 | FRAME, GRATES AND HOOD STANDARD 840.03 TYPE OF GRATE E | F | G | | CONCRETE TRANSITIONAL SECTION CATCH BASIN | DROP INLET | | G.D.I. FRAME WITH GRATE STD. 840.22 | G.D.I. FRAME WITH TWO GRATES STD. 840.22 | G.D.I. (N.S.) FRAME WITH GRATE STD. 840.24 | G.D.I. (N.S.) FRAME WITH TWO GRATES STD. 840.29 | TRAFFIC BEARING G.D.I. STD. 840.35 | DRAINAGE PIPE ELBOWS NO. & SIZE | CONC. COLLARS CL. "B" C.Y. STD 840.72 | CONC. & BRICK PIPE PLUG, C.Y. STD. 840.71 | PIPE REMOVAL LIN.FT. | REMARKS |
|---|---|---|---|---|---|---|---|---|---|---|---|---|---|---|---|---|---|---|---|---|---|---|---|---|---|---|---|---|---|
| 14+71 -L- | | | | | | | | 1 | | | | | | | | | | | | | | 1 | 1 | | | | | |
| 14+71 -L- | | | | | | | | | | | | | | | | | | | | | | | | | | | | |
| 15+25 -L- | | | | | | | | 1 | | | | | | | | | | | | | | 1 | 1 | | | | | |
| 15+25 -L- | | | | | | | | | | | | | | | | | | | | | | | | | | | | |
| 14+71 -L- | | | | | | | | 1 | | | | | | | | | | | | | | 1 | 1 | | | | | |
| 14+71 -L- | | | | | | | | | | | | | | | | | | | | | | | | | | | | |
| 15+25 -L- | | | | | | | | 1 | | | | | | | | | | | | | | 1 | 1 | | | | | |
| 15+25 -L- | | | | | | | | | | | | | | | | | | | | | | | | 2 @ 18" | | | | |
| | | | | | | | | | | | | | | | | | | | | | | | | | | | | |
| TOTAL | | | | | | | | 4 | | | | | | | | | | | | | | 4 | 4 | 2 @ 18" | | | | |

ABBREVIATIONS

| | |
|---|---|
| C.B. | CATCH BASIN |
| N.D.I. | NARROW DROP INLET |
| D.I. | DROP INLET |
| G.D.I. | GRATED DROP INLET |
| G.D.I. (N.S.) | GRATED DROP INLET (NARROW SLOT) |
| J.B. | JUNCTION BOX |
| M.H. | MANHOLE |
| T.B.D.I. | TRAFFIC BEARING DROP INLET |
| T.B.J.B. | TRAFFIC BEARING JUNCTION BOX |

4/04/06
7/31/2017
R:\Roadway\Proj\750212_rdy_psh03.dgn
USERNAME

DocuSign Envelope ID: 418405CB-B266-47A1-B979-D52A4F0F67C8

8/17/99

REVISIONS

**DETAIL 1**
SPECIAL LATERAL 'V' DITCH
( Not to Scale)

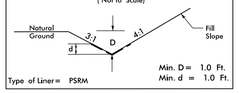


Min. D = 1.0 Ft.
Min. d = 1.0 Ft.
Type of Liner = PSRM

FROM STA. 16+50 TO STA. 17+25 –L– (RT)

**DETAIL 3**
STANDARD 'V' DITCH
( Not to Scale)

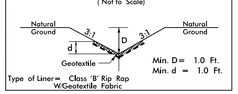


Min. D = 1.0 Ft.
Min. d = 1.0 Ft.
Type of Liner = Class 'B' Rip Rap W/Geotextile Fabric

FROM STA. 12+92 TO STA. 13+18 –L– (LT)
FROM STA. 14+30 TO STA. 14+42 –L– (LT)
FROM STA. 12+92 TO STA. 13+49 –L– (RT)
FROM STA. 14+20 TO STA. 14+42 –L– (RT)

**DETAIL 4**
RIP RAP AT EMBANKMENT
( Not to Scale)

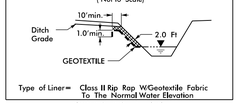


Type of Liner = Class II Rip Rap W/Geotextile Fabric To The Normal Water Elevation

STA. 13+18 –L– (LT)
STA. 13+49 –L– (RT)
STA. 14+20 –L– (RT)
STA. 14+30 –L– (LT)

**DETAIL 2**
LATERAL 'V' DITCH
( Not to Scale)

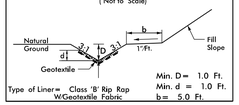


Min. D = 1.0 Ft.
Min. d = 1.0 Ft.
Type of Liner = Class 'B' Rip Rap W/Geotextile Fabric
b = 5.0 Ft.

FROM STA. 12+25 TO STA. 12+92 –L– (LT)
FROM STA. 14+42 TO STA. 16+75 –L– (LT)
FROM STA. 12+00 TO STA. 12+92 –L– (RT)
FROM STA. 14+42 TO STA. 16+50 –L– (RT)

**DETAIL 5**
LATERAL 'V' DITCH
( Not to Scale)

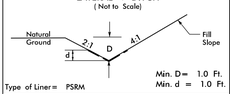


Min. D = 1.0 Ft.
Min. d = 1.0 Ft.
Type of Liner = PSRM

FROM STA. 11+00 TO STA. 12+25 –L– (LT)
FROM STA. 11+00 TO STA. 12+00 –L– (RT)

PI Sta 10+90.53
△ = 1° 46' 00.1" (LT)
D = 1° 30' 00.0"
L = 117.78'
T = 58.89'
R = 3,819.72'

PI Sta 16+39.88
△ = 7° 11' 38.8" (LT)
D = 6° 00' 00.0"
L = 119.90'
T = 60.03'
R = 954.93'

S 04°40'14" E
395.57'

NAD 83/NA 2011

-L- POT 10+00.00
-L- PC 10+31.64
-L- PT 11+49.42
-L- PC 15+79.85
-L- PT 16+99.75
-L- POT 17+38.69

RESAL & FRAN CRAVEN
DB 2335 PG 75
PB 28 PG 10

LOUISE M. PEELE &
NELLIE M. HOLT
DB 2308 PG 1051
PB 65 PG 21

MARGARET DAVIS HAYWORTH
DB 1454 PG 694

RICHLAND CREEK

-BL- 101
-BL- 102
-BL- 103

TO SEAGROVE
SR 2896 PICKETTS MILL RD
20' PAVED ROADWAY
TO COLERIDGE

N 18°29'04" E
144.43'
N 09°30'40" E
348.63'
N 88°36'18" W
579.40'
S 01°10'46" W
82.14'
S 01°10'46" W
231.32'

N 18°55' 31.6" E
N 10° 09' 31.5" E
N 2° 57' 52.8" E

-L- POC Sta. 11+10.00
BEGIN CONSTRUCTION

-L- POT Sta. 17+10.00
END CONSTRUCTION

RETAIN EXISTING CONCRETE FOOTING (SEE NOTE)

RIP RAP EMBANKMENT PROTECTION
CLASS II RIP RAP
EST 5 TONS
EST 5 SY GEO
SEE DETAIL 4

STANDARD 'V' DITCH
W/ CLASS 'B' RIP-RAP
EST 10 TONS
EST 20 SY GEO
EST 16 CY DDE
SEE DETAIL 3

LATERAL 'V' DITCH
W/ CLASS 'B' RIP-RAP
EST 25 TONS
EST 50 SY GEO
EST 60 CY DDE
SEE DETAIL 2

LATERAL 'V' DITCH
W/ PSRM
EST 90 SY PSRM
SEE DETAIL 5

TIE TO EXIST DITCH

LATERAL 'V' DITCH
W/ PSRM
EST 70 SY PSRM
SEE DETAIL 5

LATERAL 'V' DITCH
W/ CLASS 'B' RIP-RAP
EST 30 TONS
EST 70 SY GEO
EST 80 CY DDE
SEE DETAIL 2

STANDARD 'V' DITCH
W/ CLASS 'B' RIP-RAP
EST 15 TONS
EST 35 SY GEO
EST 20 CY DDE
SEE DETAIL 3

RETAIN EXISTING CONCRETE FOOTING (SEE NOTE)

RIP RAP EMBANKMENT PROTECTION
CLASS II RIP RAP
EST 5 TONS
EST 5 SY GEO
SEE DETAIL 4

EXISTING BRIDGE EXCAVATION
(SEE STRUCTURAL PLANS, TYP.)

RIP RAP EMBANKMENT PROTECTION
CLASS II RIP RAP
EST 5 TONS
EST 5 SY GEO
SEE DETAIL 4

NOTE: CONTRACTOR TO CUT OFF EXISTING TIMBER PIERS AT TOP OF EXISTING CONCRETE FOOTERS. RETAIN EXISTING CONCRETE FOOTERS. NO EQUIPMENT WILL BE ALLOWED IN STREAM DURING CONSTRUCTION.

RIP RAP EMBANKMENT PROTECTION
CLASS II RIP RAP
EST 10 TONS
EST 10 SY GEO
SEE DETAIL 4

STANDARD 'V' DITCH
W/ CLASS 'B' RIP-RAP
EST 10 TONS
EST 20 SY GEO
EST 5 CY DDE
SEE DETAIL 3

CLASS II RIP RAP TO ELEV. 440.5'
(STRUCTURAL PAY ITEM, TYP)

STANDARD 'V' DITCH
W/ CLASS 'B' RIP-RAP
EST 10 TONS
EST 20 SY GEO
EST 5 CY DDE
SEE DETAIL 3

LATERAL 'V' DITCH
W/ CLASS 'B' RIP-RAP
EST 75 TONS
EST 150 SY GEO
EST 125 CY DDE
SEE DETAIL 2

INSTALL SHOULDER BERM GUTTER FROM STA 14+67 TO 16+00 -L- (LT AND RT)

18" W/ ELBOWS
SPECIAL LATERAL 'V' DITCH
W/ PSRM
EST 60 SY PSRM
SEE DETAIL 1

TIE TO EXIST DITCH

LATERAL 'V' DITCH
W/ CLASS 'B' RIP-RAP
EST 60 TONS
EST 140 SY GEO
EST 90 CY DDE
SEE DETAIL 2

CLASS 'B' RIP RAP
OUTLET PROTECTION
EST 3 TONS
EST 10 SY GEO

UTILITY POLE OWNERS
1 - RANDOLPH ELECTRIC MEM CORP - 1051J
2 - RANDOLPH ELECTRIC MEM CORP - 1051Z
3 - RANDOLPH ELECTRIC MEM CORP - 1051F
4 - RANDOLPH TELEPHONE MEM CORP - N/A
5 - RANDOLPH TELEPHONE MEM CORP - N/A
6 - RANDOLPH ELECTRIC MEM CORP - 1051D
7 - RANDOLPH ELECTRIC MEM CORP - 1059
8 - RANDOLPH ELECTRIC MEM CORP - 1058

FOR PROFILE, SEE SHEET 5

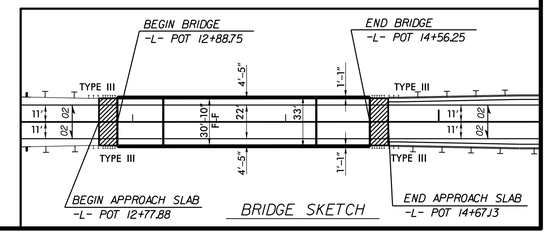


BRIDGE SKETCH

| PROJECT REFERENCE NO. | SHEET NO. |
|---|---|
| 17BP.8.R.70 | 4 |

RANDOLPH COUNTY BRIDGE #212

ROADWAY DESIGN ENGINEER
8/1/2017

NORTH CAROLINA PROFESSIONAL SEAL 16689 ENGINEER BRIAN ALLEN WILES

DocuSigned by: Brian A Wiles
88900B3A0E4E4B0...

HYDRAULICS ENGINEER
8/1/2017

NORTH CAROLINA PROFESSIONAL SEAL 036151 ENGINEER JASON D. LAMING

DocuSigned by: Jason Laming
0A2A1C0D0B6E4E7...

**DOCUMENT NOT CONSIDERED FINAL UNLESS ALL SIGNATURES COMPLETED**

CH ENGINEERING
3220 GLEN ROYAL RD. RALEIGH, NC 27617
TELE 919.788.0224 FAX 919.788.0232
NC LICENSE #P-0189

7/31/2017
H:\Projects\Proj\750212_rdy_psh04.dgn

DocuSign Envelope ID: 418405CB-B266-47A1-B979-D52A4F0F67C8

5/14/99

CH ENGINEERING
3220 GLEN ROYAL RD. RALEIGH, NC 27617
TELE 919.788.0224 FAX 919.788.0232
NC LICENSE #P-0189

| PROJECT REFERENCE NO. | SHEET NO. |
|---|---|
| 17BP.8.R.70 | 5 |

ROADWAY DESIGN ENGINEER
8/1/2017
NORTH CAROLINA PROFESSIONAL SEAL 16689 ENGINEER BRIAN A. WILLIS ALLEN
DocuSigned by: Brian A Willis
889000FFA2E340F...

HYDRAULICS ENGINEER
NORTH CAROLINA PROFESSIONAL SEAL 032615 ENGINEER JASON D. LAWING
DocuSigned by: Jason Lawing
8/1/2017

**DOCUMENT NOT CONSIDERED FINAL UNLESS ALL SIGNATURES COMPLETED**

## BRIDGE HYDRAULIC DATA

| | | |
|---|---|---|
| DESIGN DISCHARGE | = 6200 | CFS |
| DESIGN FREQUENCY | = 25 | YRS |
| DESIGN HW ELEVATION | = 439.5 | FT |
| BASE DISCHARGE | = 8600 | CFS |
| BASE FREQUENCY | = 100 | YRS |
| BASE HW ELEVATION | = 441.09 | FT |
| OVERTOPPING DISCHARGE | = 23550 | CFS |
| OVERTOPPING FREQUENCY | = >500 | YRS |
| OVERTOPPING ELEVATION | = 448.60 | FT |
| DATE OF SURVEY | = 01/09/2014 | |
| W.S. ELEVATION AT DATE OF SURVEY | = 431.0 | FT |

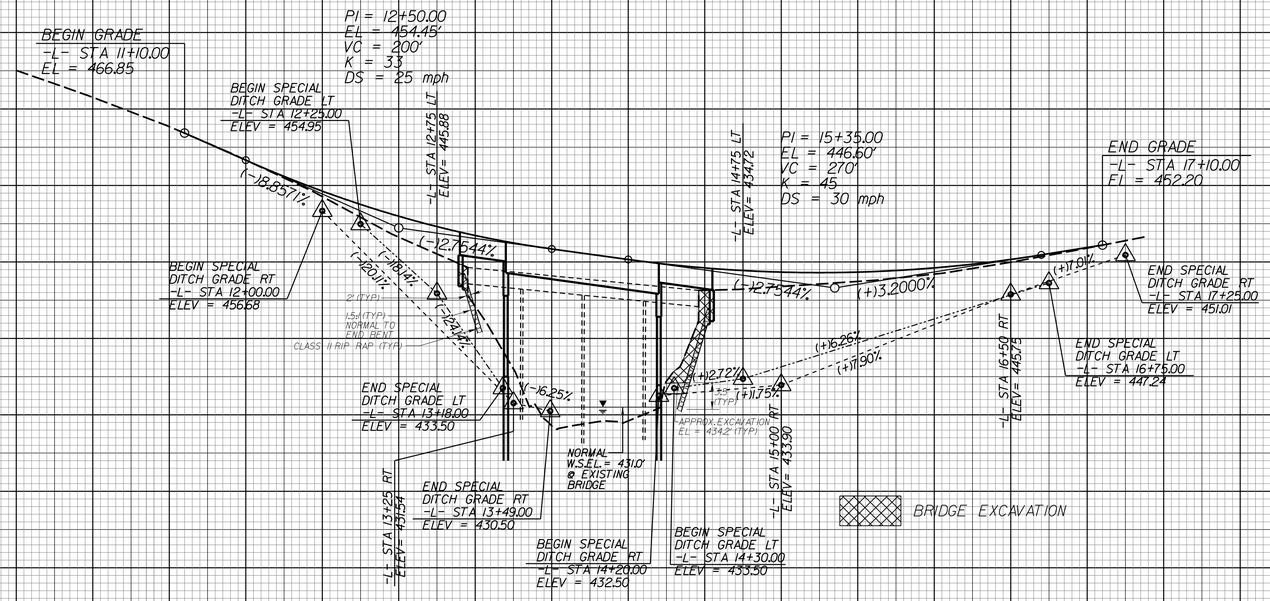


BM 1 ELEV = 435.65'
N 675,590 E 1,803,781
-L- STA 14+30 62' RIGHT
RR SPIKE IN BASE OF 24" SWEETGUM TREE

RIGHT DITCH ----------
LEFT DITCH -·-·-·-·-·-

FOR PLAN, SEE SHEET 4

7/31/2017
R:\Roadway\Proj\750212_rdy_pl105.dgn

| PROJ. REFERENCE NO. | SHEET NO. |
|---|---|
| 17BP.8.R.70 | TMP-1 |

THE FOLLOWING ROADWAY STANDARDS AS APPEAR IN "ROADWAY STANDARD DRAWINGS" - PROJECT SERVICES UNIT - N.C. DEPARTMENT OF TRANSPORTATION - RALEIGH, N.C., DATED JANUARY 2012 ARE APPLICABLE TO THIS PROJECT AND BY REFERENCE HEREBY ARE CONSIDERED A PART OF THESE PLANS:

| STD. | TITLE |
|---|---|
| 1101.03 | TEMPORARY ROAD CLOSURES |
| 1110.01 | STATIONARY WORK ZONE SIGNS |
| 1145.01 | BARRICADES |
| 1205.01 | PAVEMENT MARKINGS - LINE TYPES AND OFFSETS |
| 1205.12 | PAVEMENT MARKINGS - BRIDGES |
| 1250.01 | RAISED PAVEMENT MARKERS - INSTALLATION SPACING |
| 1251.01 | RAISED PAVEMENT MARKERS - TYPES AND MOUNTING |
| 1261.01 | GUARDRAIL AND BARRIER DELINEATORS - INSTALLATION SPACING |
| 1261.02 | GUARDRAIL AND BARRIER DELINEATORS - TYPES AND MOUNTING |
| 1262.01 | GUARDRAIL END DELINEATION |

## *GENERAL NOTES*

CHANGES MAY BE REQUIRED WHEN PHYSICAL DIMENSIONS IN THE DETAIL DRAWINGS, STANDARD DETAILS, AND ROADWAY DETAILS ARE NOT ATTAINABLE TO MEET FIELD CONDITIONS OR RESULT IN DUPLICATE OR UNDESIRED OVERLAPPING OF DEVICES. MODIFICATION MAY INCLUDE: MOVING, SUPPLEMENTING, COVERING, OR REMOVAL OF DEVICES AS DIRECTED BY THE ENGINEER.

THE FOLLOWING GENERAL NOTES APPLY AT ALL TIMES FOR THE DURATION OF THE CONSTRUCTION PROJECT EXCEPT WHEN OTHERWISE NOTED IN THE PLAN OR DIRECTED BY THE ENGINEER.

TRAFFIC PATTERN ALTERATIONS

A) NOTIFY THE ENGINEER TWENTY ONE (21) CALENDAR DAYS PRIOR TO ANY TRAFFIC PATTEN ALTERATION.

SIGNING

B) PROVIDE SIGNING AND DEVICES REQUIRED TO CLOSE THE ROAD ACCORDING TO THE ROADWAY STANDARD DRAWINGS AND TRAFFIC CONTROL PLANS.

PROVIDE SIGNING REQUIRED FOR THE OFF-SITE DETOUR ROUTE AS SHOWN IN THE TRAFFIC CONTROL PLANS.

C) COVER OR REMOVE ALL SIGNS AND DEVICES REQUIRED TO CLOSE THE ROAD WHEN ROAD CLOSURE IS NOT IN OPERATION.

COVER OR REMOVE ALL SIGNS REQUIRED FOR THE OFF-SITE DETOUR WHEN THE DETOUR IS NOT IN OPERATION.

D) ENSURE ALL NECESSARY SIGNING IS IN PLACE PRIOR TO ALTERING ANY TRAFFIC PATTERN.

TRAFFIC CONTROL DEVICES

E) PLACE TYPE III BARRICADES, WITH "ROAD CLOSED" SIGN R11-2 ATTACHED, OF SUFFICIENT LENGTH TO CLOSE ENTIRE ROADWAY.

PAVEMENT MARKINGS AND MARKERS

F) INSTALL PAVEMENT MARKINGS ON THE FINAL SURFACE.

## *PHASING*

STEP 1: USING ROADWAY STANDARD DRAWING NUMBER 1101.03, SHEET 1 OF 9, AND TMP-2, PERFORM THE FOLLOWING:
- INSTALL ALL ROAD CLOSURE AND DETOUR SIGNING INCLUDING BARRICADES
- CLOSE SR 2896 (PICKETTS MILL ROAD)
- PLACE TRAFFIC ONTO OFF-SITE DETOUR

STEP 2: REMOVE EXISTING BRIDGE #212 AND CONSTRUCT THE PROPOSED BRIDGE AND APPROACHES AS SHOWN IN THE CONSTRUCTION PLANS.

STEP 3: INSTALL FINAL PAVEMENT MARKINGS.

STEP 4: REMOVE ALL TRAFFIC CONTROL SIGNING AND DEVICES AND RE-OPEN SR 2896 (PICKETTS MILL ROAD) TO THE FINAL TRAFFIC PATTERN.

## *PAVEMENT MARKING*

| | |
|---|---|
| THERMOPLASTIC PAVEMENT MARKING LINES (4", 90 MILS) | 1200 LF |
| THERMOPLASTIC PAVEMENT MARKING LINES (4", 120 MILS) | 1200 LF |
| PERMANENT RAISED PAVEMENT MARKERS | 15 EACH |

APPROVED: DocuSigned by: Brian A Wiles 8890D0FEA2E34DE...

DATE: 7/31/2017

SEAL

NORTH CAROLINA PROFESSIONAL SEAL 16689 ENGINEER BRIAN ALLEN WILES

DOCUMENT NOT CONSIDERED FINAL UNLESS ALL SIGNATURES COMPLETED

DIVISION OF HIGHWAYS · STATE OF NORTH CAROLINA · DEPARTMENT OF TRANSPORTATION · WORK ZONE TRAFFIC CONTROL

# TRANSPORTATION OPERATIONS PLAN

7/31/2017
R:\Traffic\TrafficControl\TCP\750212_TC_TMP.dgn
USERNAME

| PROJ. REFERENCE NO. | SHEET NO. |
|---|---|
| 17BP.8.R.70 | TMP-2 |

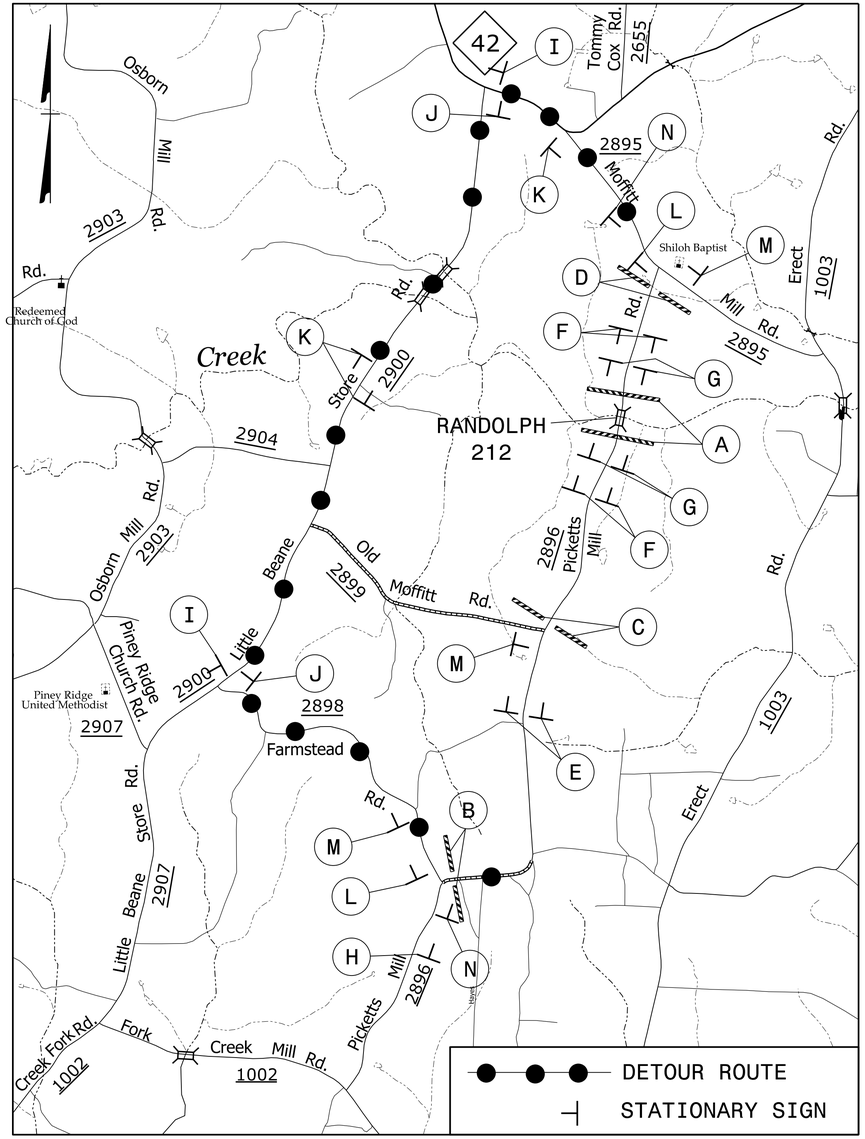

W20-3
48″ x 48″

Ⓔ

W20-3
48″ x 48″

Ⓕ

W20-3
48″ x 48″

Ⓖ

W20-2
48″ x 48″

Ⓗ

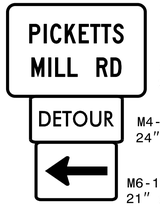


SP-1
36″ x 24″

M4-8
24″ x 12″

M6-1
21″ x 15″

Ⓘ

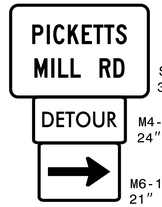


SP-1
36″ x 24″

M4-8
24″ x 12″

M6-1
21″ x 15″

Ⓙ

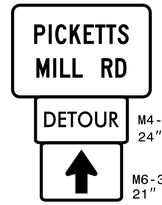


SP-1
36″ x 24″

M4-8
24″ x 12″

M6-3
21″ x 15″

Ⓚ

M4-8 A
24″ X 18″

Ⓛ

W20-3
48″ x 48″

SP-4L
42″ X 12″

Ⓜ

W20-3
48″ x 48″

SP-4R
42″ X 12″

Ⓝ

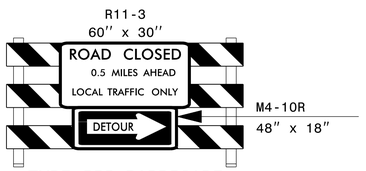


M4-10R
48″ x 18″

TYPE III BARRICADE

Ⓓ

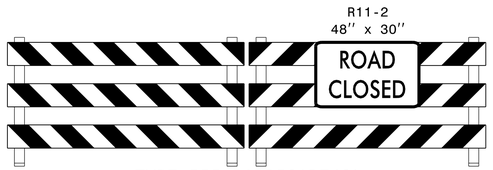


TYPE III BARRICADE(S)

Ⓐ

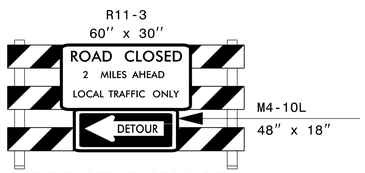


M4-10L
48″ x 18″

TYPE III BARRICADE

Ⓑ

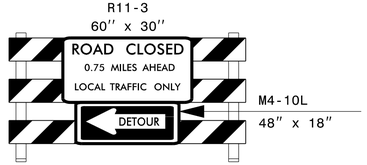


M4-10L
48″ x 18″

TYPE III BARRICADE

Ⓒ

APPROVED: DocuSigned by: Brian A Wiles 889D0DFEA2E34DE...

DATE: 7/31/2017

SEAL

NORTH CAROLINA PROFESSIONAL SEAL 16689 ENGINEER BRIAN ALLEN WILES

DOCUMENT NOT CONSIDERED FINAL UNLESS ALL SIGNATURES COMPLETED

DIVISION OF HIGHWAYS · STATE OF NORTH CAROLINA · DEPARTMENT OF TRANSPORTATION · WORK ZONE TRAFFIC CONTROL

# DETOUR ROUTE AND SIGNS

7/31/2017
R:\STIP\Traffic\TrafficControl\TCP\7502I2_TC_TMP.dgn
USERNAME

| PROJ. REFERENCE NO. | SHEET NO. |
|---|---|
| 17BP.8.R.70 | TMP-3 |

SIGN NUMBER: SP-1
TYPE: STATIONARY
QUANTITY: SEE PLANS

SIGN WIDTH: 3′-0″
HEIGHT: 2′-0″
TOTAL AREA: 6.0 Sq.Ft.

BORDER TYPE: INSET
RECESS: 0.47″
WIDTH: 0.63″
RADII: 1.5″

NO. Z BARS:
LENGTH:

BACKG COLOR: Fluorescent Orange
COPY COLOR: Black

| SYMBOL | X | Y | WID | HT |
|---|---|---|---|---|
| | | | | |
| | | | | |
| | | | | |
| | | | | |
| | | | | |
| | | | | |
| | | | | |

MAT′L: 0.080″ (2.0 mm) ALUMINUM

USE NOTES: 1,2

1. Legend and border shall be direct applied black non-reflective sheeting.
2. Background shall be NC GRADE B fluorescent orange retroreflective sheeting.

DESIGN BY: none
PROJECT ID: ID
CHECKED BY:
LOCATION:
Jul 28, 2017
DIV: 8

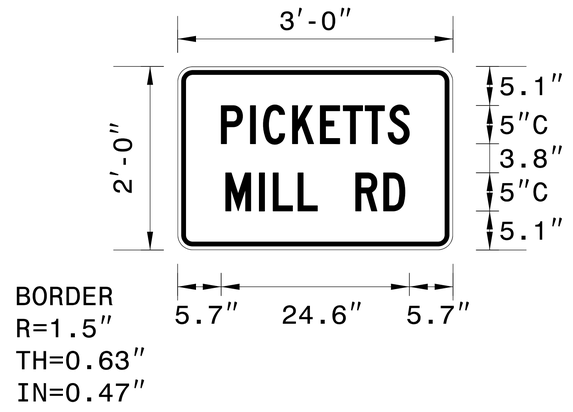


Spacing Factor is 1 unless specified otherwise

LETTER POSITIONS

Letter spacings are to start of next letter

| | | | | | | | | | | | | | | | | | | | | | | | | | Series/Size Text Length |
|---|---|---|---|---|---|---|---|---|---|---|---|---|---|---|---|---|---|---|---|---|---|---|---|---|---|
| | | P | I | C | K | E | T | T | S | | | | | | | | | | | | | | | | C 2000 |
| | 5.7 | 3.8 | 1.7 | 3.8 | 3.7 | 3 | 2.8 | 3 | 2.8 | 5.7 | | | | | | | | | | | | | | | 24.6 |
| | | M | I | L | L | | R | D | | | | | | | | | | | | | | | | | C 2000 |
| | 6.3 | 4.4 | 1.8 | 3.3 | 2.5 | 5 | 3.7 | 2.8 | 6.3 | | | | | | | | | | | | | | | | 23.5 |
| | | | | | | | | | | | | | | | | | | | | | | | | | |
| | | | | | | | | | | | | | | | | | | | | | | | | | |
| | | | | | | | | | | | | | | | | | | | | | | | | | |
| | | | | | | | | | | | | | | | | | | | | | | | | | |
| | | | | | | | | | | | | | | | | | | | | | | | | | |
| | | | | | | | | | | | | | | | | | | | | | | | | | |
| | | | | | | | | | | | | | | | | | | | | | | | | | |
| | | | | | | | | | | | | | | | | | | | | | | | | | |

FILENAME: rand 212_picketts mill rd_sign_design

NORTH CAROLINA D.O.T. SIGN DETAIL

APPROVED: DocuSigned by: Brian A Wiles 8890D0FEA2E34DE...
DATE: 7/31/2017
SEAL

NORTH CAROLINA PROFESSIONAL SEAL 16689 ENGINEER BRIAN ALLEN WILES

DOCUMENT NOT CONSIDERED FINAL UNLESS ALL SIGNATURES COMPLETED

DIVISION OF HIGHWAYS · STATE OF NORTH CAROLINA · DEPARTMENT OF TRANSPORTATION · WORK ZONE TRAFFIC CONTROL

SIGN DESIGN

7/31/2017
R:\Traffic\TrafficControl\TCP\Randolph212_TC_specialsign.dgn
USERNAME_

# TIP PROJECT: 17BP.8.R.70

See Sheet 1-A For Index of Sheets

| STATE | STATE PROJECT REFERENCE NO. | SHEET NO. | TOTAL SHEETS |
|---|---|---|---|
| N.C. | SF-750212 | EC-1 | |

| STATE PROJ. NO. | F. A. PROJ. NO. | DESCRIPTION |
|---|---|---|
| 17BP.8.R.70 | | PE |

STATE OF NORTH CAROLINA
DIVISION OF HIGHWAYS

# PLAN FOR PROPOSED HIGHWAY EROSION CONTROL

# RANDOLPH COUNTY

**LOCATION: BRIDGE NO. 750212 ON SR 2896 (PICKETTS MILL ROAD) OVER RICHLAND CREEK**

**TYPE OF WORK: GRADING, DRAINAGE, PAVING and STRUCTURE**

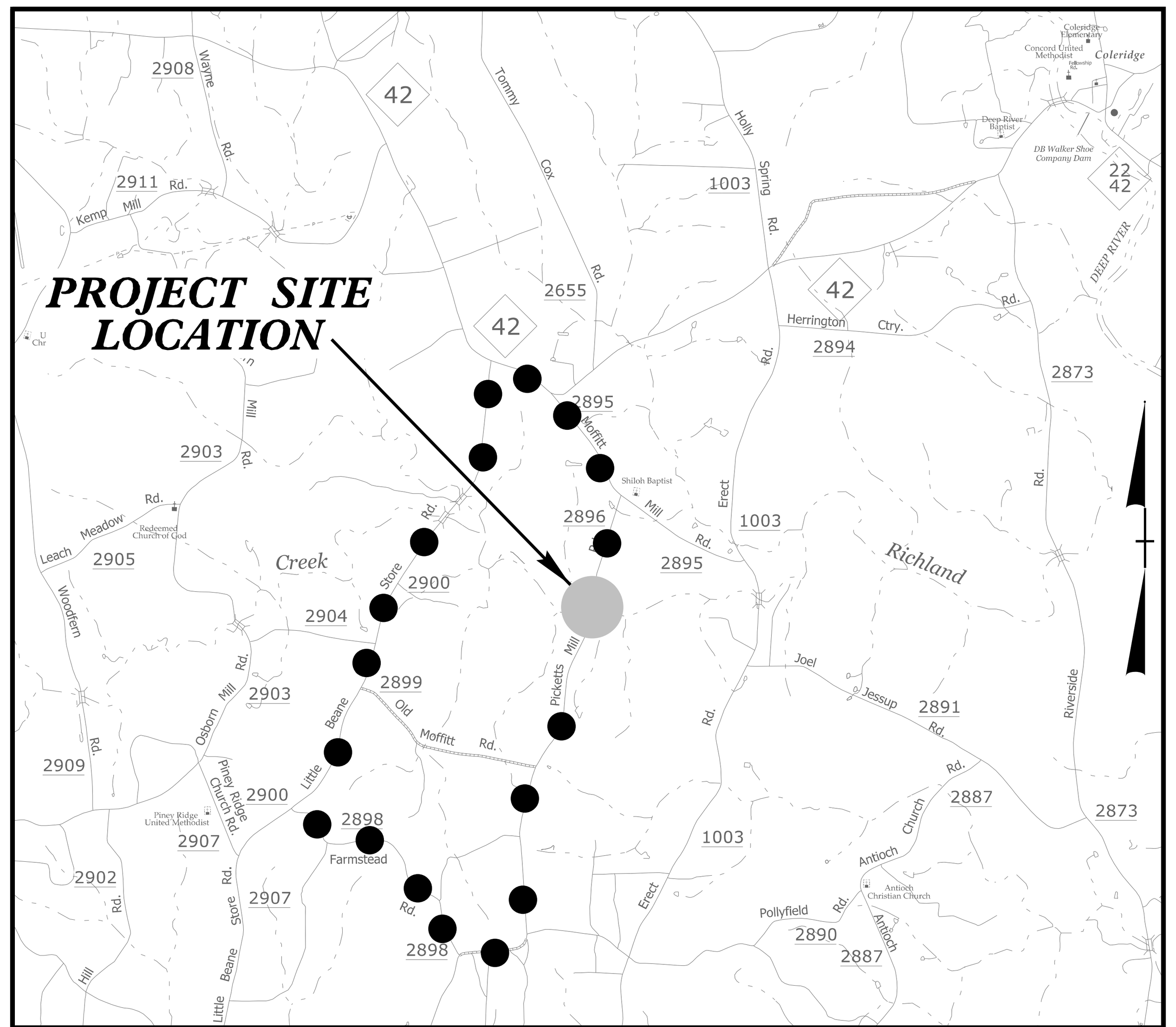


## VICINITY MAP

●—●—●—● OFF-SITE DETOUR ROUTE

*N.T.S.*

## EROSION AND SEDIMENT CONTROL MEASURES

| Std. # | Description | Symbol |
|---|---|---|
| 1630.03 | Temporary Silt Ditch | TSD |
| 1630.05 | Temporary Diversion | TD |
| 1605.01 | Temporary Silt Fence | |
| 1606.01 | Special Sediment Control Fence | |
| 1622.01 | Temporary Berms and Slope Drains | |
| 1630.02 | Silt Basin Type B | |
| 1633.01 | Temporary Rock Silt Check Type-A | |
| | Temporary Rock Silt Check Type-A with Matting and Polyacrylamide (PAM) | |
| 1633.02 | Temporary Rock Silt Check Type-B | |
| | Wattle/ Coir Fiber Wattle | EW / CFW |
| | Wattle/ Coir Fiber Wattle with Polyacrylamide (PAM) | |
| 1634.01 | Temporary Rock Sediment Dam Type-A | |
| 1634.02 | Temporary Rock Sediment Dam Type-B | |
| 1635.01 | Rock Pipe Inlet Sediment Trap Type-A | |
| 1635.02 | Rock Pipe Inlet Sediment Trap Type-B | |
| 1630.04 | Stilling Basin | |
| 1630.06 | Special Stilling Basin | |
| | Rock Inlet Sediment Trap: | |
| 1632.01 | Type A | A |
| 1632.02 | Type B | B |
| 1632.03 | Type C | C |
| | Skimmer Basin | |
| | Tiered Skimmer Basin | |
| | Infiltration Basin | |

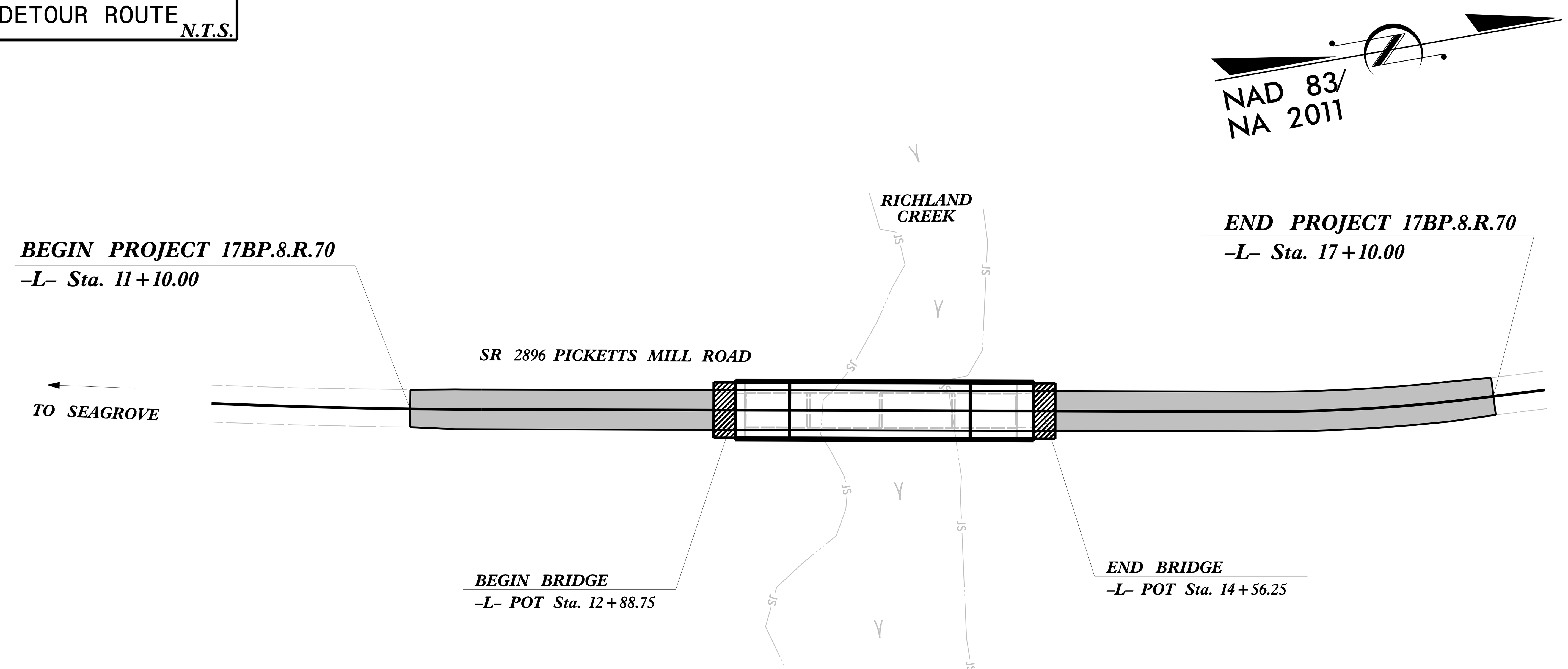


Elizabeth W. Lynch
LEVEL IIIA NAME

704
LEVEL IIIA CERTIFICATION NO.

**THIS PROJECT CONTAINS EROSION CONTROL PLANS FOR CLEARING AND GRUBBING PHASE OF CONSTRUCTION.**

# CONTRACT:

**GRAPHIC SCALE**

20 0 40

PLANS

*ROADSIDE ENVIRONMENTAL UNIT*
*DIVISION OF HIGHWAYS*
*STATE OF NORTH CAROLINA*

*THESE EROSION AND SEDIMENT CONTROL PLANS COMPLY WITH THE REGULATIONS SET FORTH BY THE NCG-010000 GENERAL CONSTRUCTION PERMIT EFFECTIVE AUGUST 3, 2011 ISSUED BY THE NORTH CAROLINA DEPARTMENT OF ENVIRONMENT AND NATURAL RESOURCES DIVISION OF WATER QUALITY.*

*PLANS PREPARED BY:*

CH ENGINEERING
3220 GLEN ROYAL RD. RALEIGH, NC 27617
TELE 919.788.0224 FAX 919.788.0232
NC LICENSE #P-0189

Kimley»Horn ©2014
NC LICENSE #F-0102
P.O. BOX 33068
RALEIGH, NORTH CAROLINA 27636
PHONE: (919) 677-2000

*PLANS PREPARED FOR:*

*DIVISION OF HIGHWAYS*
*DIVISION 8*
*902 N Sandhills Blvd*
*Aberdeen, NC 28315*

**2012 STANDARD SPECIFICATIONS**

Roadway Standard Drawings

The following roadway english standards as appear in "Roadway Standard Drawings"– Roadway Design Unit – N. C. Department of Transportation – Raleigh, N. C., dated January 2012 and the latest revison thereto are applicable to this project and by reference hereby are considered a part of these plans.

| | |
|---|---|
| 1604.01 | Railroad Erosion Control Detail |
| 1605.01 | Temporary Silt Fence |
| 1606.01 | Special Sediment Control Fence |
| 1607.01 | Gravel Construction Entrance |
| 1622.01 | Temporary Berms and Slope Drains |
| 1630.01 | Riser Basin |
| 1630.02 | Silt Basin Type B |
| 1630.03 | Temporary Silt Ditch |
| 1630.04 | Stilling Basin |
| 1630.05 | Temporary Diversion |
| 1630.06 | Special Stilling Basin |
| 1631.01 | Matting Installation |
| 1632.01 | Rock Inlet Sediment Trap Type A |
| 1632.02 | Rock Inlet Sediment Trap Type B |
| 1632.03 | Rock Inlet Sediment Trap Type C |
| 1633.01 | Temporary Rock Silt Check Type A |
| 1633.02 | Temporary Rock Silt Check Type B |
| 1634.01 | Temporary Rock Sediment Dam Type A |
| 1634.02 | Temporary Rock Sediment Dam Type B |
| 1635.01 | Rock Pipe Inlet Sediment Trap Type A |
| 1635.02 | Rock Pipe Inlet Sediment Trap Type B |
| 1640.01 | Coir Fiber Baffle |
| 1645.01 | Temporary Stream Crossing |

$$$$$$SYSTIME$$$$$ $$$$$$$$$DGN$$$$$$$$$$$$$$$ $$$$$USERNAME$$$$

| PROJECT REFERENCE NO. | SHEET NO. |
|---|---|
| 17BP.8.R.70 | EC-2 |
| R/W SHEET NO. | |

CH ENGINEERING
3220 GLEN ROYAL RD. RALEIGH, NC 27617
TELE 919.788.0224 FAX 919.788.0232
NC LICENSE #P-0189

Kimley»Horn

REVISIONS

8/17/99

# TEMPORARY ROCK SILT CHECK TYPE 'A' WITH EXCELSIOR MATTING AND POLYACRYLAMIDE (PAM)

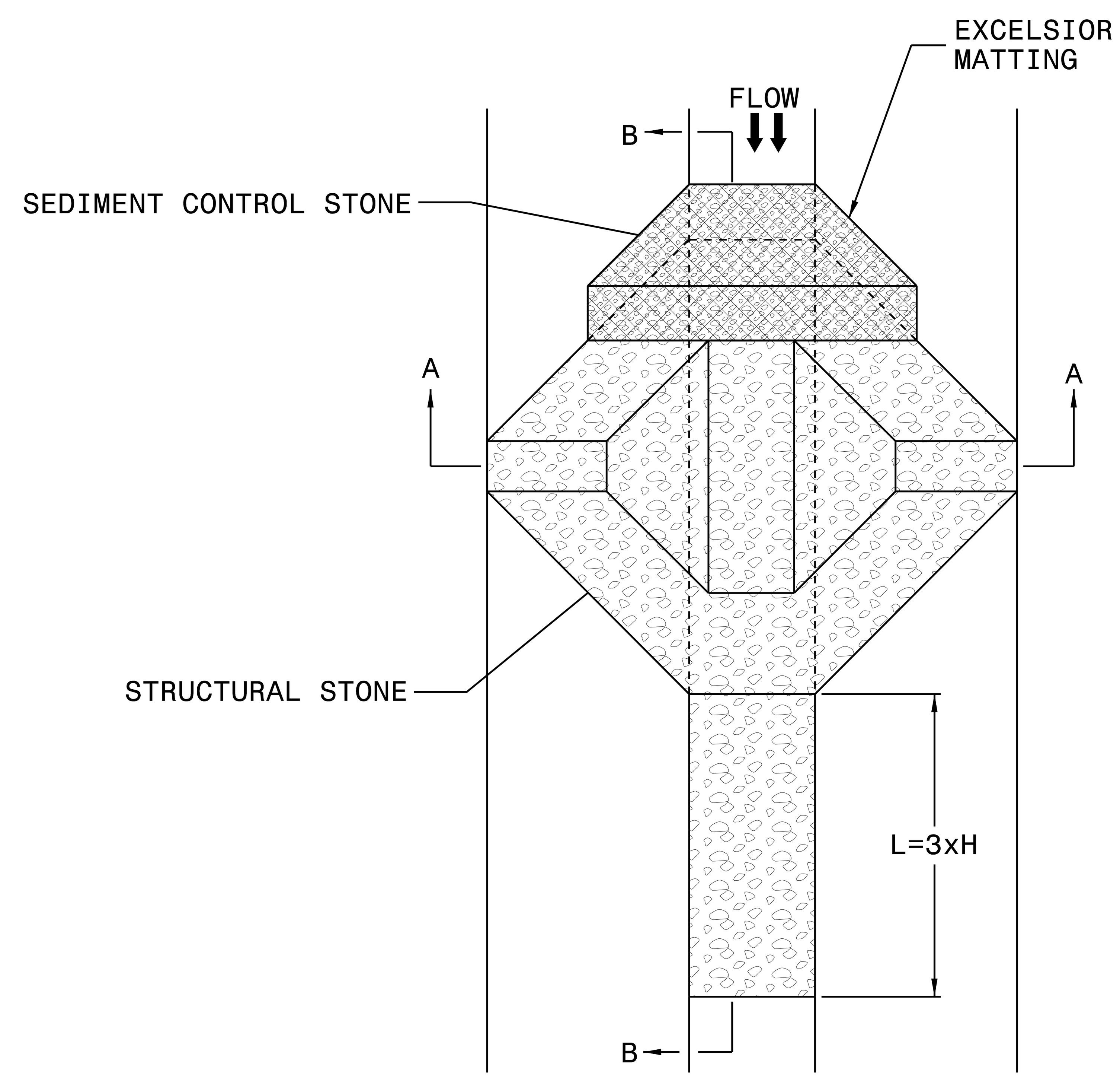


PLAN

NOTES

USE EXCELSIOR FOR MATTING MATERIAL AND ANCHOR MATTING SECTION AT TOP AND BOTTOM WITH CLASS B STONE.

PRIOR TO POLYACRYLAMIDE (PAM) APPLICATION, OBTAIN A SOIL SAMPLE FROM PROJECT LOCATION, AND FROM OFFSITE MATERIAL, AND ANALYZE FOR APPROPRIATE PAM FLOCCULANT TO BE APPLIED TO EACH ROCK SILT CHECK.

INITIALLY APPLY 4 OUNCES OF POLYACRYLAMIDE (PAM) TO TOP OF MATTING SECTION AND AFTER EVERY RAINFALL EVENT THAT EQUALS OR EXCEEDS 0.50 INCHES.

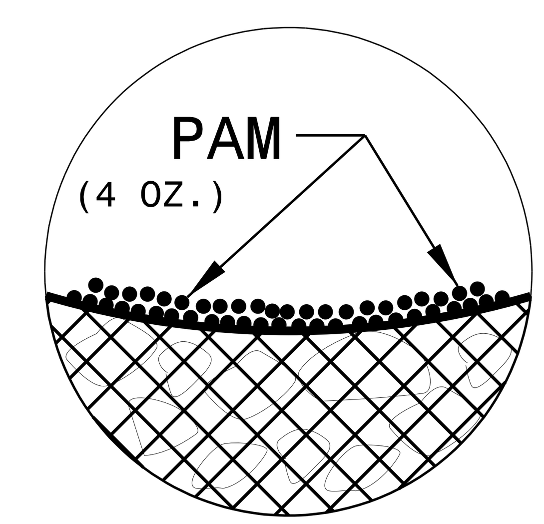


INSET A

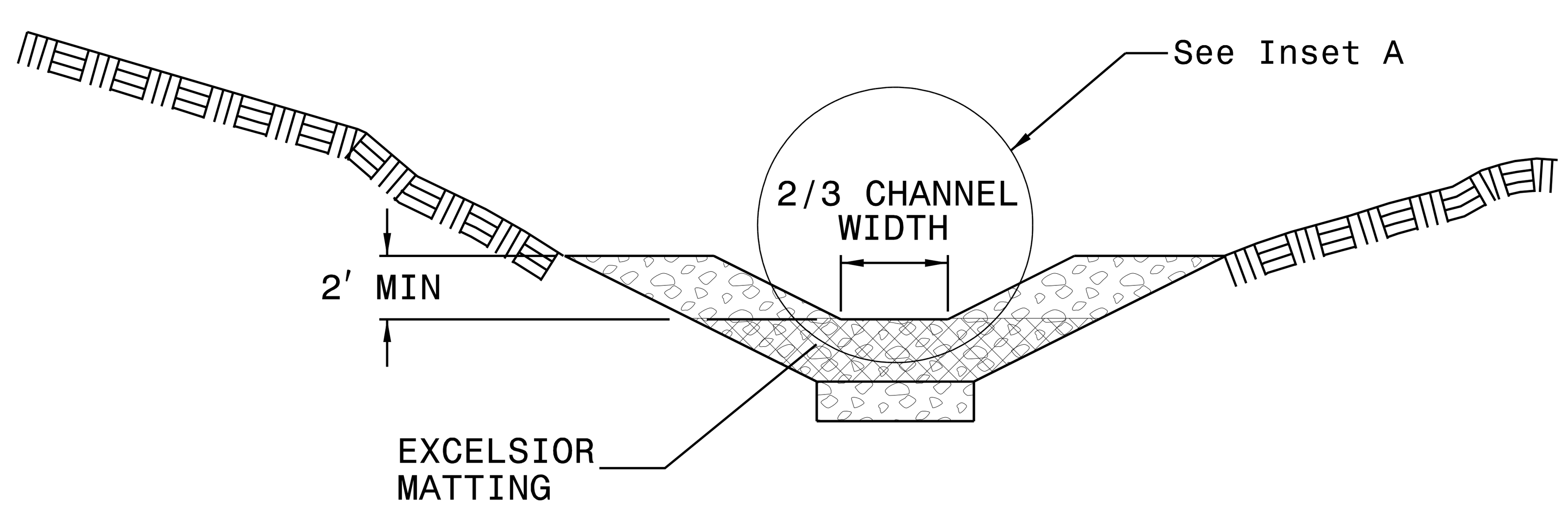


SECTION A-A

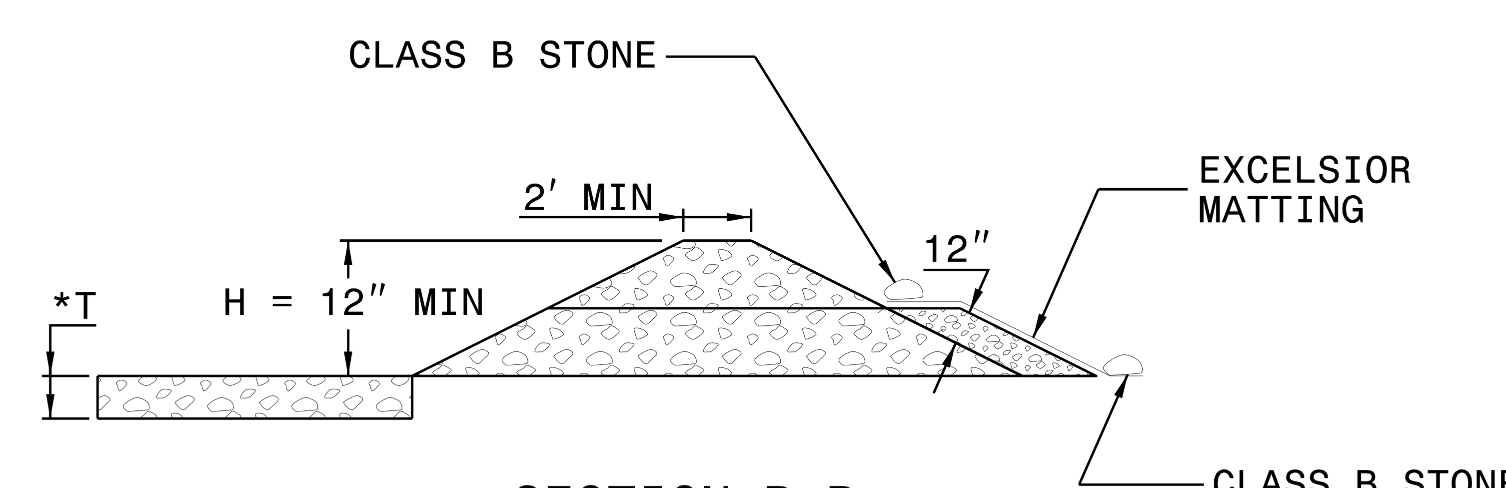


SECTION B-B

*T = 12" MIN., 18" MAX.

NOT TO SCALE

$$$$SYSTIME$$$$
$$$$$$DGN$$$$$$$$$$$$$$$$$$$$$
$$$$USERNAME$$$$

8/17/99

REVISIONS

# DIVISION OF HIGHWAYS
# STATE OF NORTH CAROLINA

| PROJECT REFERENCE NO. | SHEET NO. |
|---|---|
| 17BP.8.R.70 | EC-3 |
| R/W SHEET NO. | |

CH ENGINEERING
3220 GLEN ROYAL RD. RALEIGH, NC 27617
TELE 919.788.0224 FAX 919.788.0232
NC LICENSE #P-0189

Kimley»Horn

# SOIL STABILIZATION SUMMARY SHEET

## MATTING FOR EROSION CONTROL

| CONST SHEET NO. | LINE | FROM STATION | TO STATION | SIDE | ESTIMATE (SY) |
|---|---|---|---|---|---|
| 4 | -L- | 11+25 | 12+90 | RT | 130 (SLOPE) |
| 4 | -L- | 11+25 | 12+90 | LT | 240 (SLOPE) |
| 4 | -L- | 14+55 | 16+25 | RT | 375 (SLOPE) |
| 4 | -L- | 14+55 | 16+50 | LT | 350 (SLOPE) |
| | | | | | |
| | | | | | |
| | | | SUBTOTAL | | 1,095 |
| | | MATTING FOR WATTLE INSTALLATION | | | 0 |
| MISCELLANEOUS MATTING TO BE INSTALLED AS DIRECTED BY THE ENGINEER | | | | | 200 |
| | | | | TOTAL | 1,295 |
| | | | | SAY | 1,300 |

## PERMANENT SOIL REINFORCEMENT MAT

| CONST SHEET NO. | LINE | FROM STATION | TO STATION | SIDE | ESTIMATE (SY) |
|---|---|---|---|---|---|
| 4 | -L- | 11+00 | 12+25 | LT | 90 |
| 4 | -L- | 11+00 | 12+00 | RT | 70 |
| 4 | -L- | 16+50 | 17+25 | RT | 60 |
| | | | | | |
| | | | | | |
| | | | | | |
| | | | SUBTOTAL | | 220 |
| | | ADDITIONAL PSRM TO BE INSTALLED | | | 0 |
| | | | | TOTAL | 220 |
| | | | | SAY | 250 |

8/17/99

| PROJECT REFERENCE NO. | SHEET NO. |
| --- | --- |
| 17BP.8.R.70 | EC-3A |
| R/W SHEET NO. | |

CH ENGINEERING
3220 GLEN ROYAL RD. RALEIGH, NC 27617
TELE 919.788.0224 FAX 919.788.0232
NC LICENSE #P-0189

Kimley»Horn

DIVISION OF HIGHWAYS
STATE OF NORTH CAROLINA

# SOIL STABILIZATION TIMEFRAMES

| SITE DESCRIPTION | STABILIZATION TIME | TIMEFRAME EXCEPTIONS |
| --- | --- | --- |
| PERIMETER DIKES, SWALES, DITCHES AND SLOPES | 7 DAYS | NONE |
| HIGH QUALITY WATER (HQW) ZONES | 7 DAYS | NONE |
| SLOPES STEEPER THAN 3:1 | 7 DAYS | IF SLOPES ARE 10' OR LESS IN LENGTH AND ARE NOT STEEPER THAN 2:1, 14 DAYS ARE ALLOWED. |
| SLOPES 3:1 OR FLATTER | 14 DAYS | 7 DAYS FOR SLOPES GREATER THAN 50' IN LENGTH. |
| ALL OTHER AREAS WITH SLOPES FLATTER THAN 4:1 | 14 DAYS | NONE, EXCEPT FOR PERIMETERS AND HQW ZONES. |

REVISIONS

$$$$$$SYSTIME$$$$
$$$$$$$$$$$$$$$$$$$$$$DGN$$$$$$$$$$$$$$$$$$$$$
$$$$$USERNAME$$$$

8/17/99

REVISIONS

| PROJECT REFERENCE NO. | SHEET NO. |
|---|---|
| 17BP.8.R.70 | EC-4/CONST.4 |
| R/W SHEET NO. | |

CH ENGINEERING
3220 GLEN ROYAL RD. RALEIGH, NC 27617
TELE 919.788.0224 FAX 919.788.0232
NC LICENSE #P-0189

Kimley»Horn

# EROSION CONTROL PLAN

NAD 83/NA 2011

**DETAIL 1**
SPECIAL LATERAL 'V' DITCH
( Not to Scale)

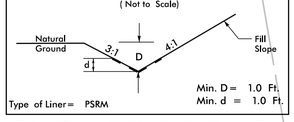


Min. D = 1.0 Ft.
Min. d = 1.0 Ft.
Type of Liner = PSRM

FROM STA. 16+50 TO STA. 17+25 –L– (RT)

**DETAIL 2**
LATERAL 'V' DITCH
( Not to Scale)

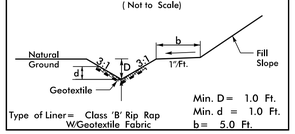


Min. D = 1.0 Ft.
Min. d = 1.0 Ft.
b = 5.0 Ft.
Type of Liner = Class 'B' Rip Rap W/Geotextile Fabric

FROM STA. 12+25 TO STA. 12+92 –L– (LT)
FROM STA. 14+42 TO STA. 16+75 –L– (LT)
FROM STA. 12+00 TO STA. 12+92 –L– (RT)
FROM STA. 14+42 TO STA. 16+50 –L– (RT)

**DETAIL 3**
STANDARD 'V' DITCH
( Not to Scale)

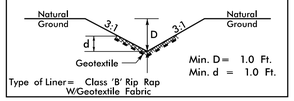


Min. D = 1.0 Ft.
Min. d = 1.0 Ft.
Type of Liner = Class 'B' Rip Rap W/Geotextile Fabric

FROM STA. 12+92 TO STA. 13+18 –L– (LT)
FROM STA. 14+30 TO STA. 14+42 –L– (LT)
FROM STA. 12+92 TO STA. 13+49 –L– (RT)
FROM STA. 14+20 TO STA. 14+42 –L– (RT)

**DETAIL 4**
RIP RAP AT EMBANKMENT
( Not to Scale)




Type of Liner = Class II Rip Rap W/Geotextile Fabric

STA. 13+18 –L– (LT)
STA. 13+49 –L– (RT)
STA. 14+20 –L– (RT)
STA. 14+30 –L– (LT)

**DETAIL 5**
LATERAL 'V' DITCH
( Not to Scale)




Min. D = 1.0 Ft.
Min. d = 1.0 Ft.
Type of Liner = PSRM

FROM STA. 11+00 TO STA. 12+25 –L– (LT)
FROM STA. 11+00 TO STA. 12+00 –L– (RT)

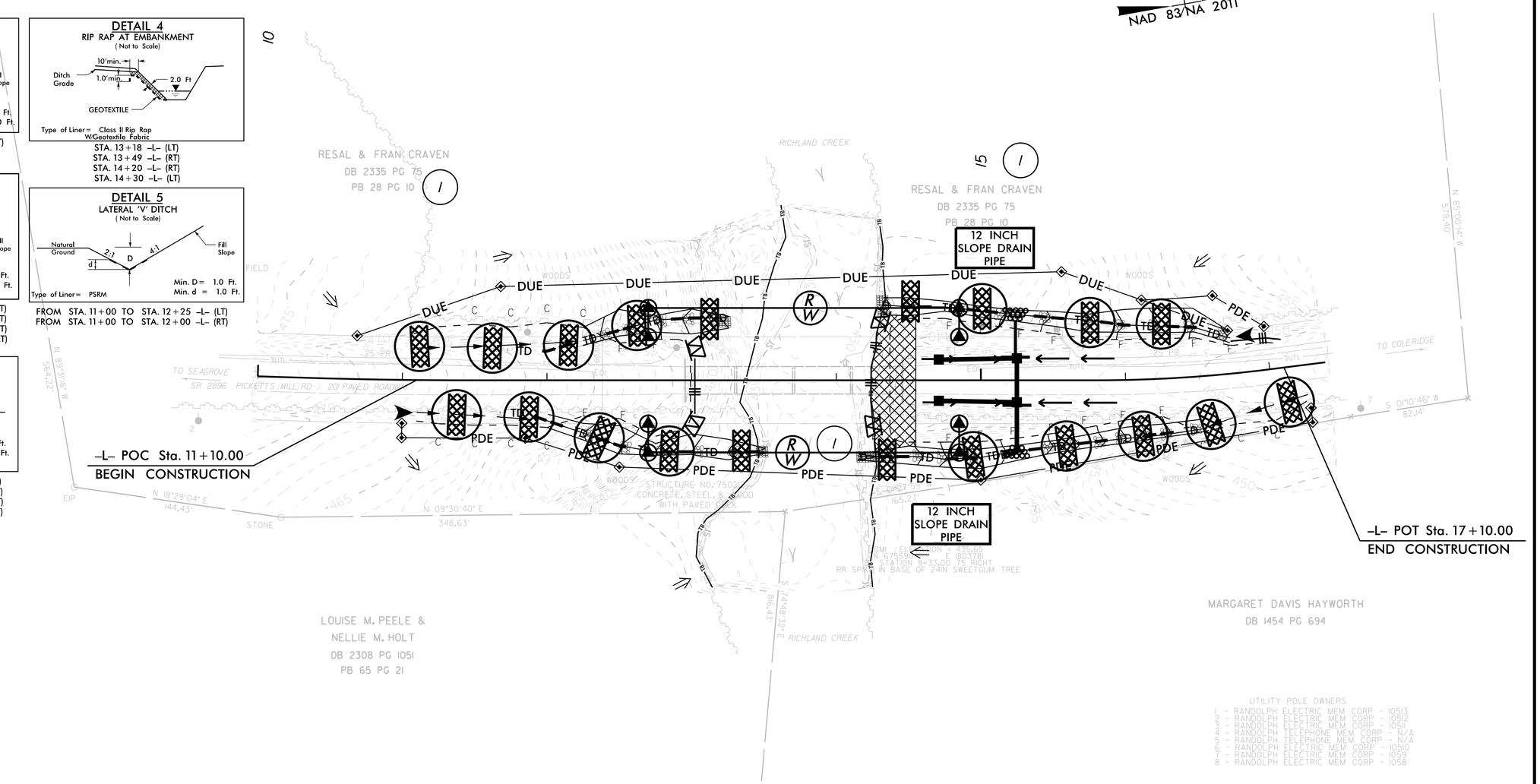


UTILITY POLE OWNERS
1 - RANDOLPH ELECTRIC MEM CORP - 10513
2 - RANDOLPH ELECTRIC MEM CORP - 10512
3 - RANDOLPH ELECTRIC MEM CORP - 1051I
4 - RANDOLPH TELEPHONE MEM CORP - N/A
5 - RANDOLPH TELEPHONE MEM CORP - N/A
6 - RANDOLPH ELECTRIC MEM CORP - 10510
7 - RANDOLPH ELECTRIC MEM CORP - 1059
8 - RANDOLPH ELECTRIC MEM CORP - 1058

CLEARING AND GRUBBING EROSION CONTROL FOR CONSTRUCTION SHEET 4

NOTE:
PERIMETER EROSION CONTROL MEASURES SHALL BE INSTALLED DURING CLEARING AND GRUBBING PHASE.

NOTE:
PLACE TEMPORARY ROCK SEDIMENT DAMS TYPE – B AND TEMPORARY ROCK SILT CHECKS TYPE – A AT DRAINAGE OUTLETS.

NOTE:
UTILIZE TEMPORARY SEDIMENT BASIN OR SPECIAL STILLING BASIN(S) AS STILLING BASIN WHERE APPLICABLE.

SYSTIMESTAMP

8/17/99

REVISIONS

| PROJECT REFERENCE NO. | SHEET NO. |
|---|---|
| 17BP.8.R.70 | EC-5/CONST.4 |
| R/W SHEET NO. | |

CH ENGINEERING
3220 GLEN ROYAL RD. RALEIGH, NC 27617
TELE 919.788.0224 FAX 919.788.0232
NC LICENSE #P-0189

Kimley»Horn

# EROSION CONTROL PLAN

NAD 83/NA 2011

**DETAIL 1**
SPECIAL LATERAL 'V' DITCH
( Not to Scale)

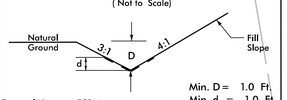


Min. D= 1.0 Ft.
Min. d = 1.0 Ft.
Type of Liner= PSRM

FROM STA. 16+50 TO STA. 17+25 -L- (RT)

**DETAIL 4**
RIP RAP AT EMBANKMENT
( Not to Scale)

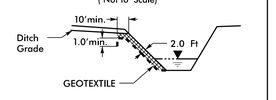


Type of Liner= Class II Rip Rap W/Geotextile Fabric

STA. 13+18 -L- (LT)
STA. 13+49 -L- (RT)
STA. 14+20 -L- (RT)
STA. 14+30 -L- (LT)

**DETAIL 2**
LATERAL 'V' DITCH
( Not to Scale)

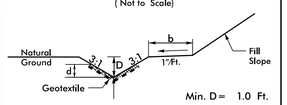


Min. D= 1.0 Ft.
Min. d = 1.0 Ft.
b= 5.0 Ft.
Type of Liner= Class 'B' Rip Rap W/Geotextile Fabric

FROM STA. 12+25 TO STA. 12+92 -L- (LT)
FROM STA. 14+42 TO STA. 16+75 -L- (LT)
FROM STA. 12+00 TO STA. 12+92 -L- (RT)
FROM STA. 14+42 TO STA. 16+50 -L- (RT)

**DETAIL 5**
LATERAL 'V' DITCH
( Not to Scale)

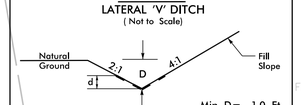


Min. D= 1.0 Ft.
Min. d = 1.0 Ft.
Type of Liner= PSRM

FROM STA. 11+00 TO STA. 12+25 -L- (LT)
FROM STA. 11+00 TO STA. 12+00 -L- (RT)

**DETAIL 3**
STANDARD 'V' DITCH
( Not to Scale)

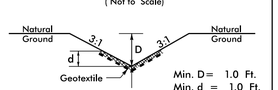


Min. D= 1.0 Ft.
Min. d = 1.0 Ft.
Type of Liner= Class 'B' Rip Rap W/Geotextile Fabric

FROM STA. 12+92 TO STA. 13+18 -L- (LT)
FROM STA. 14+30 TO STA. 14+42 -L- (LT)
FROM STA. 12+92 TO STA. 13+49 -L- (RT)
FROM STA. 14+20 TO STA. 14+42 -L- (RT)

Place Matting for Erosion Control on Slope as Work Allows. Sta. 11+25 to Sta. 12+90 LT

Place Matting for Erosion Control on Slope as Work Allows. Sta. 14+55 to Sta. 16+50 LT

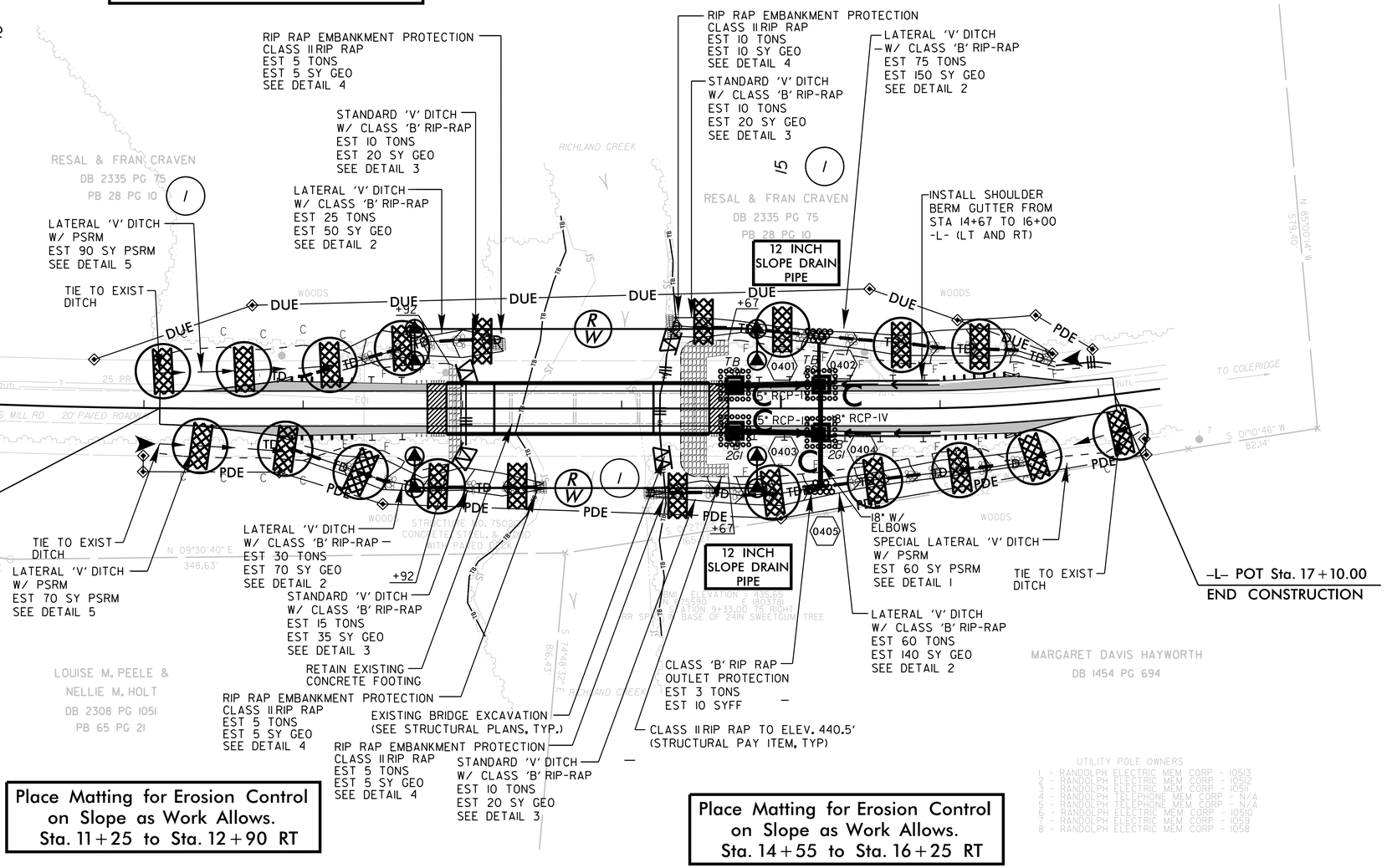


Place Matting for Erosion Control on Slope as Work Allows. Sta. 11+25 to Sta. 12+90 RT

Place Matting for Erosion Control on Slope as Work Allows. Sta. 14+55 to Sta. 16+25 RT

UTILITY POLE OWNERS
1 - RANDOLPH ELECTRIC MEM CORP - 10513
2 - RANDOLPH ELECTRIC MEM CORP - 1052
3 - RANDOLPH ELECTRIC MEM CORP - 1051F
4 - RANDOLPH TELEPHONE MEM CORP - N/A
5 - RANDOLPH TELEPHONE MEM CORP - N/A
6 - RANDOLPH ELECTRIC MEM CORP - 10510
7 - RANDOLPH ELECTRIC MEM CORP - 1059
8 - RANDOLPH ELECTRIC MEM CORP - 1058

SYSTEM#EROSION

09/08/99

**TIP PROJECT: 17BP.8.R.70**

**CONTRACT:**

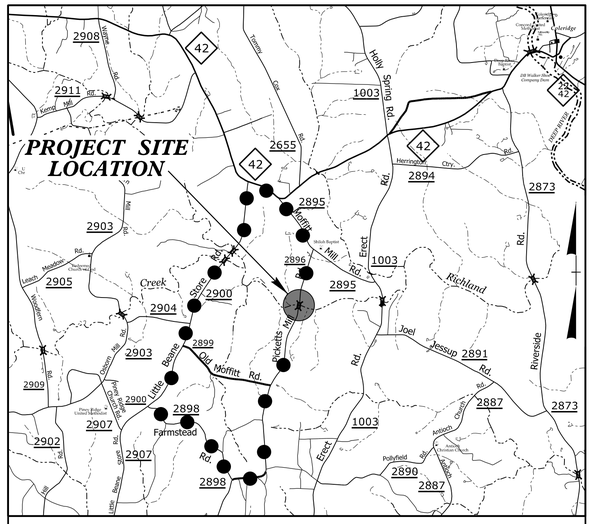


**VICINITY MAP**

OFF-SITE DETOUR ROUTE *N.T.S.*

STATE OF NORTH CAROLINA
DIVISION OF HIGHWAYS

# *UTILITIES BY OTHERS PLANS*
# *RANDOLPH COUNTY*

| T.I.P. NO. | SHEET NO. |
|---|---|
| 17BP.8.R.70 | UO–1 |

NOTE:
ALL UTILITY WORK SHOWN ON THIS SHEET IS DONE BY OTHERS.
NO PAYMENT WILL BE MADE TO THE CONTRACTOR FOR UTILITY WORK SHOWN ON THIS SHEET.

***LOCATION: BRIDGE NO. 750212 ON SR 2896 (PICKETTS MILL ROAD) OVER RICHLAND CREEK***

***TYPE OF WORK: AERIAL & BURIED UTILITIES***

NAD 83/
NA 2011

## *UO–2*

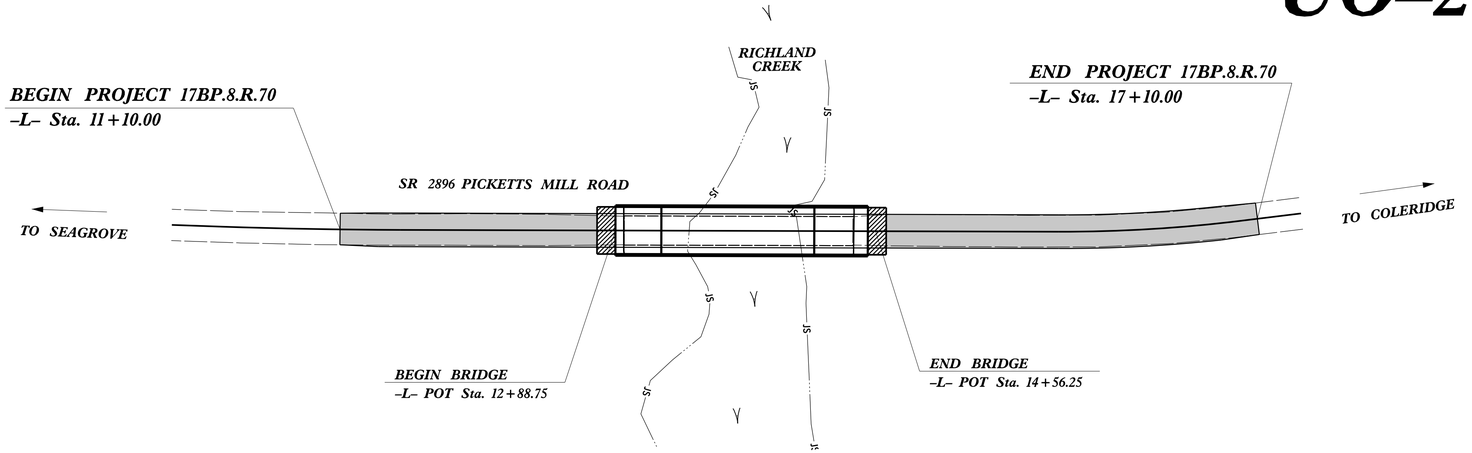


***GRAPHIC SCALES***

50 25 0 50 100
PLANS

***INDEX OF SHEETS***

| *SHEET NO.* | *DESCRIPTION* |
|---|---|
| *UO–1* | *TITLE SHEET* |
| *UO–2* | *UTILITY BY OTHERS PLAN SHEETS* |

***UTILITY OWNERS ON PROJECT***

*(A) POWER–RANDOLPH EMC*
*Richard Thomas PHONE: (910) 948–3401*
*(B) PHONE–RANDOLPH TELEPHONE MEMBERSHIP CORP.*
*Allen Shaw PHONE: (336) 879–7930*

***PLANS PREPARED BY:***

CH ENGINEERING
3220 GLEN ROYAL RD. RALEIGH, NC 27617
TELE 919.788.0224 FAX 919.788.0232
NC LICENSE #P-0189

***UTILITIES PROJECT ENGINEER***

*Brian Wiles, P.E.*

***DIVISION OF HIGHWAYS***
***UTILITIES UNIT***
*1555 MAIL SERVICES CENTER*
*RALEIGH NC 27699–1555*
*PHONE (919) 707–6690*
*FAX (919) 250–4151*

| | |
|---|---|
| | *UTILITIES REGIONAL ENGINEER* |
| | *UTILITIES ENGINEER* |
| *JAMIE YOW* | *UTILITIES AREA COORDINATOR* |
| | *UTILITIES COORDINATOR* |

7/31/2017
R:\Utilities\750212_UTL_UBO_TSH.dgn
_USERNAME_

| PROJECT REFERENCE NO. | SHEET NO. |
|---|---|
| 17BP.8.R.70 | U0-2 |

# UTILITIES BY OTHERS

NOTE:
ALL PROPOSED UTILITY WORK SHOWN ON THIS SHEET WILL BE DONE BY OTHERS. NO PAYMENT WILL BE MADE TO THE CONTRACTOR FOR PROPOSED UTILITY WORK SHOWN ON THIS SHEET.


CH ENGINEERING
3220 GLEN ROYAL RD. RALEIGH, NC 27617
TELE 919.788.0224 FAX 919.788.0232
NC LICENSE #P-0189


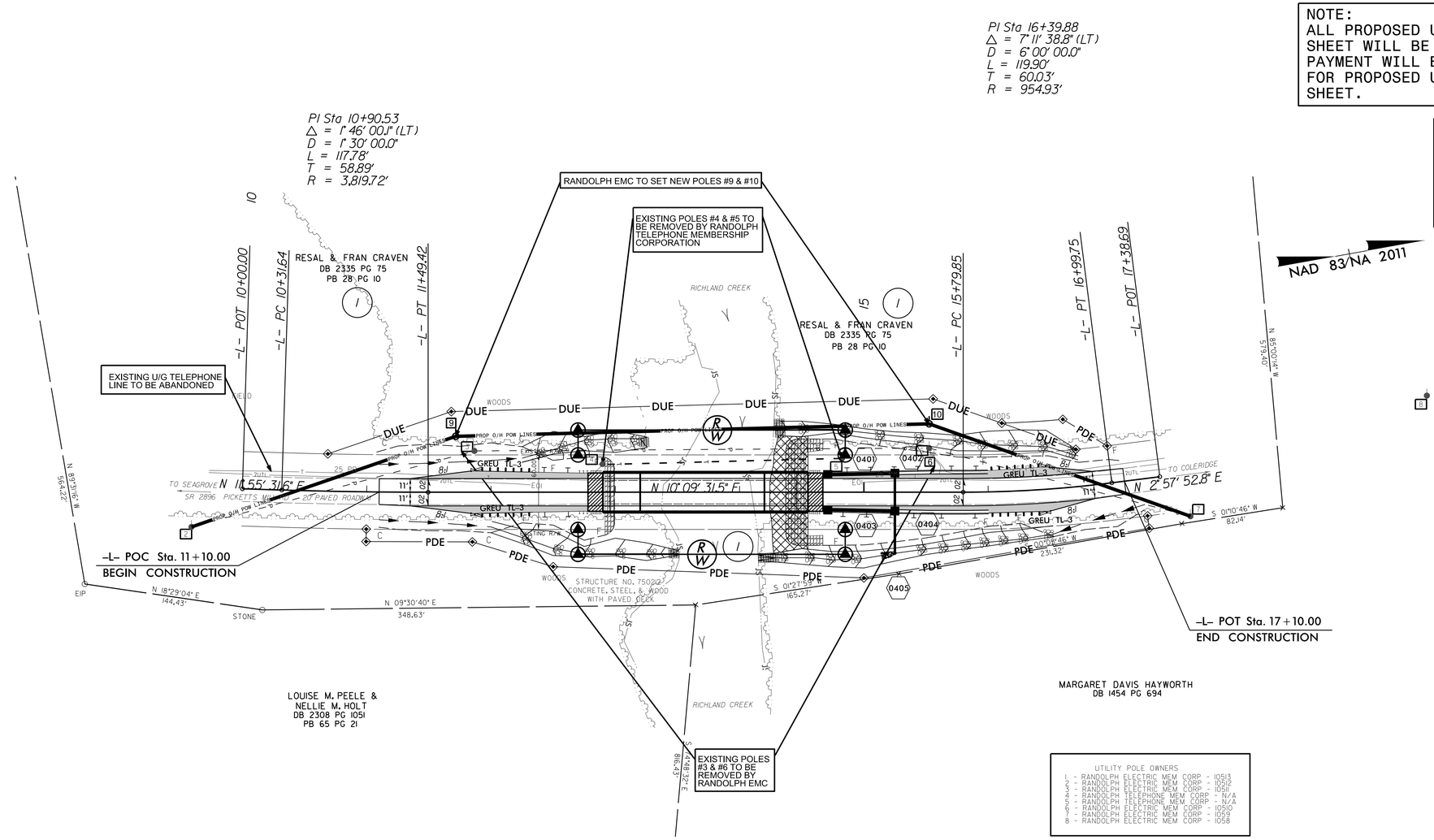


UTILITY POLE OWNERS
1 - RANDOLPH ELECTRIC MEM CORP - 10513
2 - RANDOLPH ELECTRIC MEM CORP - 10512
3 - RANDOLPH ELECTRIC MEM CORP - 10511
4 - RANDOLPH TELEPHONE MEM CORP - N/A
5 - RANDOLPH TELEPHONE MEM CORP - N/A
6 - RANDOLPH ELECTRIC MEM CORP - 10510
7 - RANDOLPH ELECTRIC MEM CORP - 1059
8 - RANDOLPH ELECTRIC MEM CORP - 1058

5/14/99
8/17/99
7/31/2017
R:\Utilities\750212_UTL_UBO_psh04.dgn
USERNAME

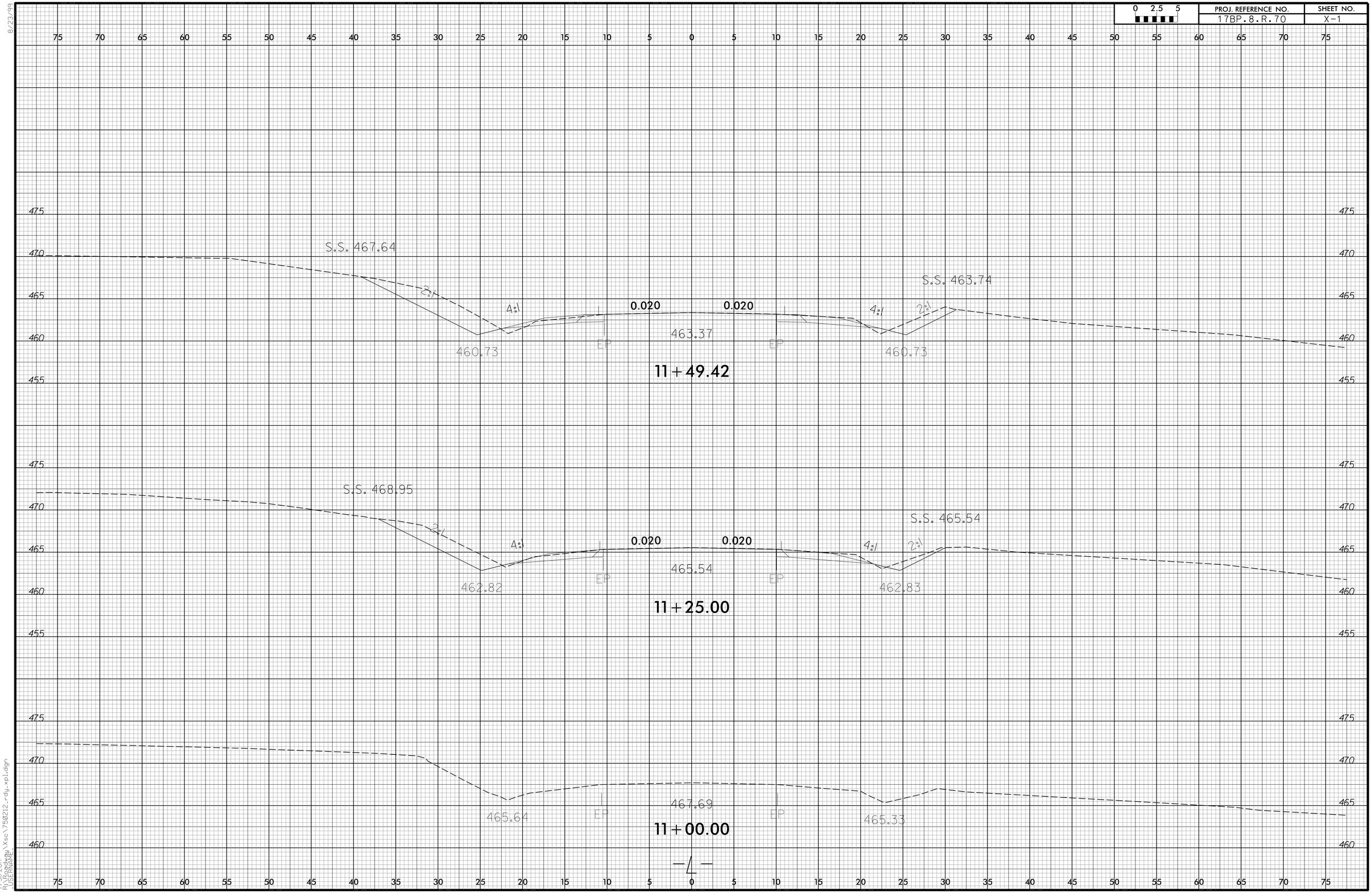


8/23/99

7/31/2017
R:\Roadway\Xsc\750212_rdy_xpl.dgn
USERNAME

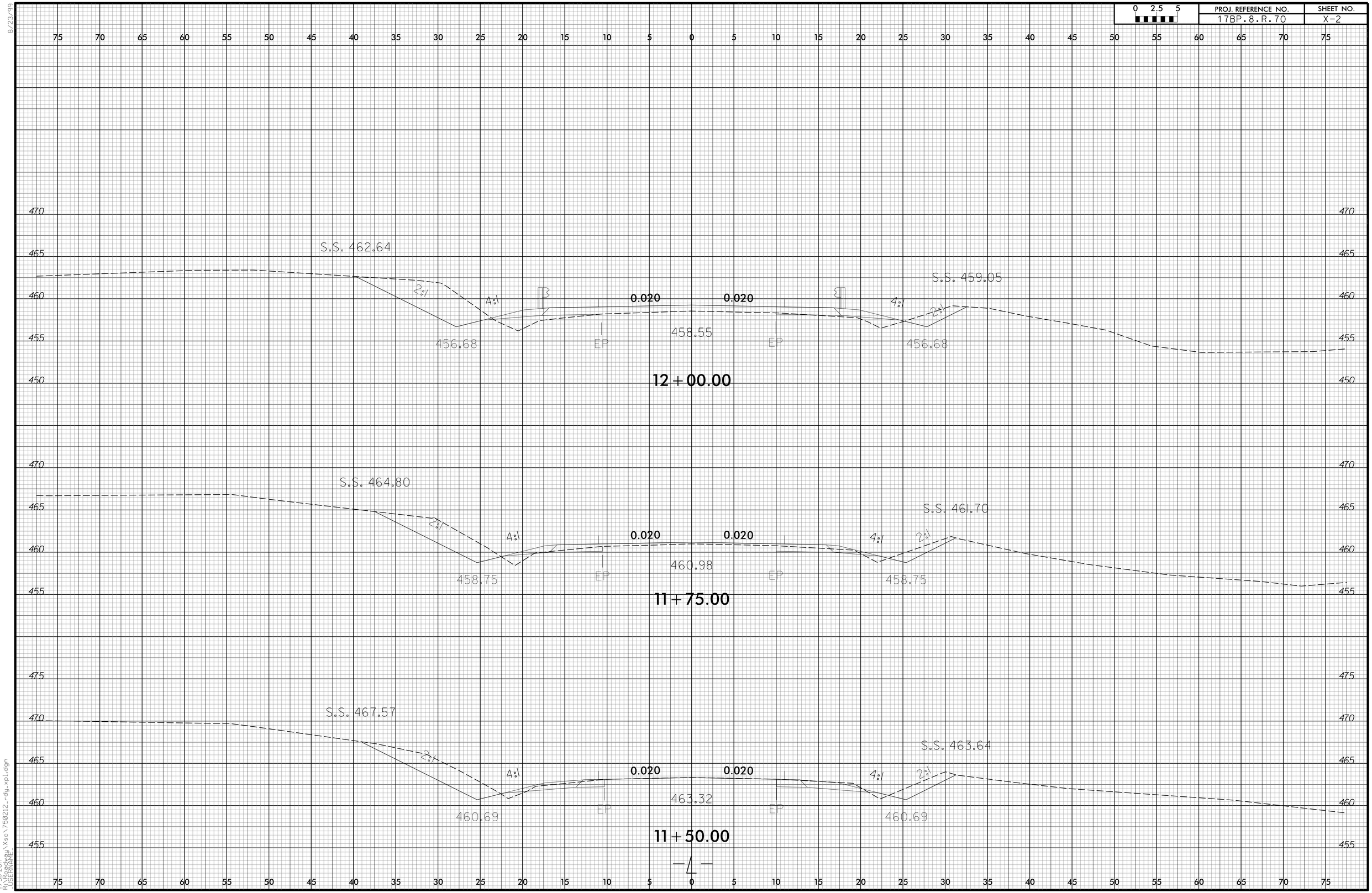


8/23/99

7/31/2017
R:\Roadway\Xsc\750212_rdy_xpl.dgn
USERNAME

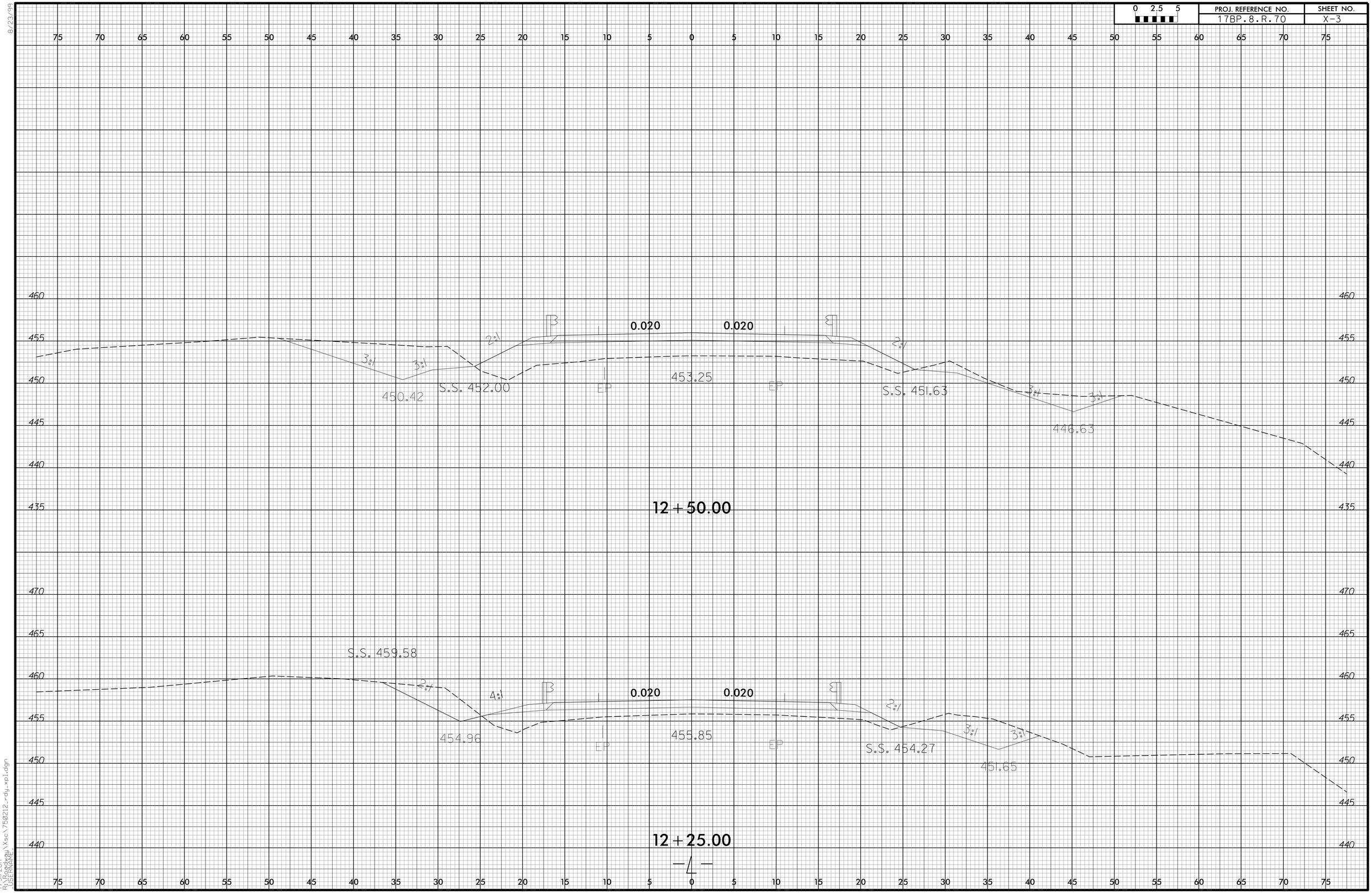


8/23/99

7/31/2017
R:\Roadway\Xsc\750212_rdy_xpl.dgn
USERNAME

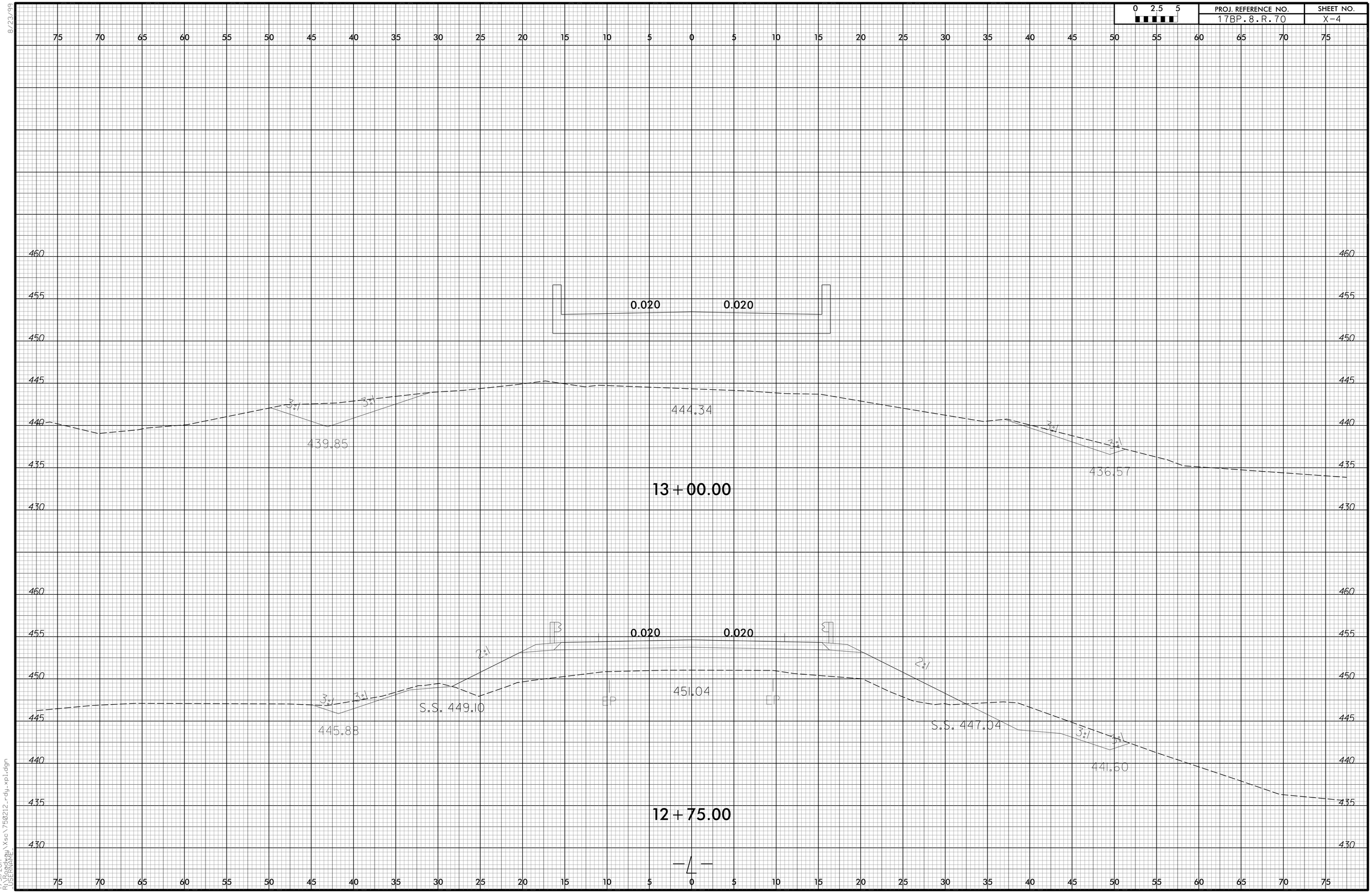


8/23/99

7/31/2017
R:\Roadway\Xsc\750212_rdy_xpl.dgn
USERNAME

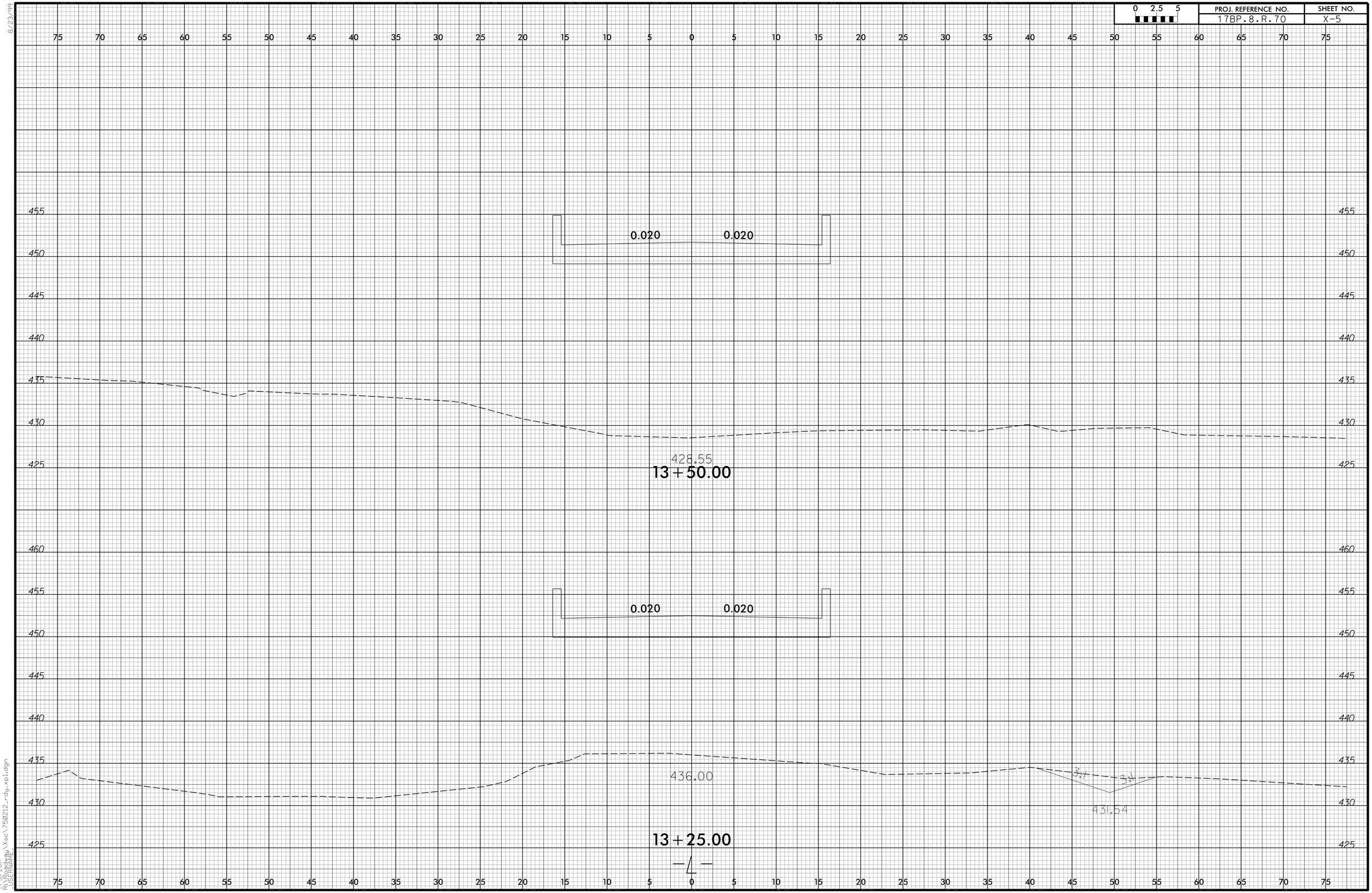


8/23/99

7/31/2017
R:\Roadway\Xsc\750212_rdy_xpl.dgn
USERNAME

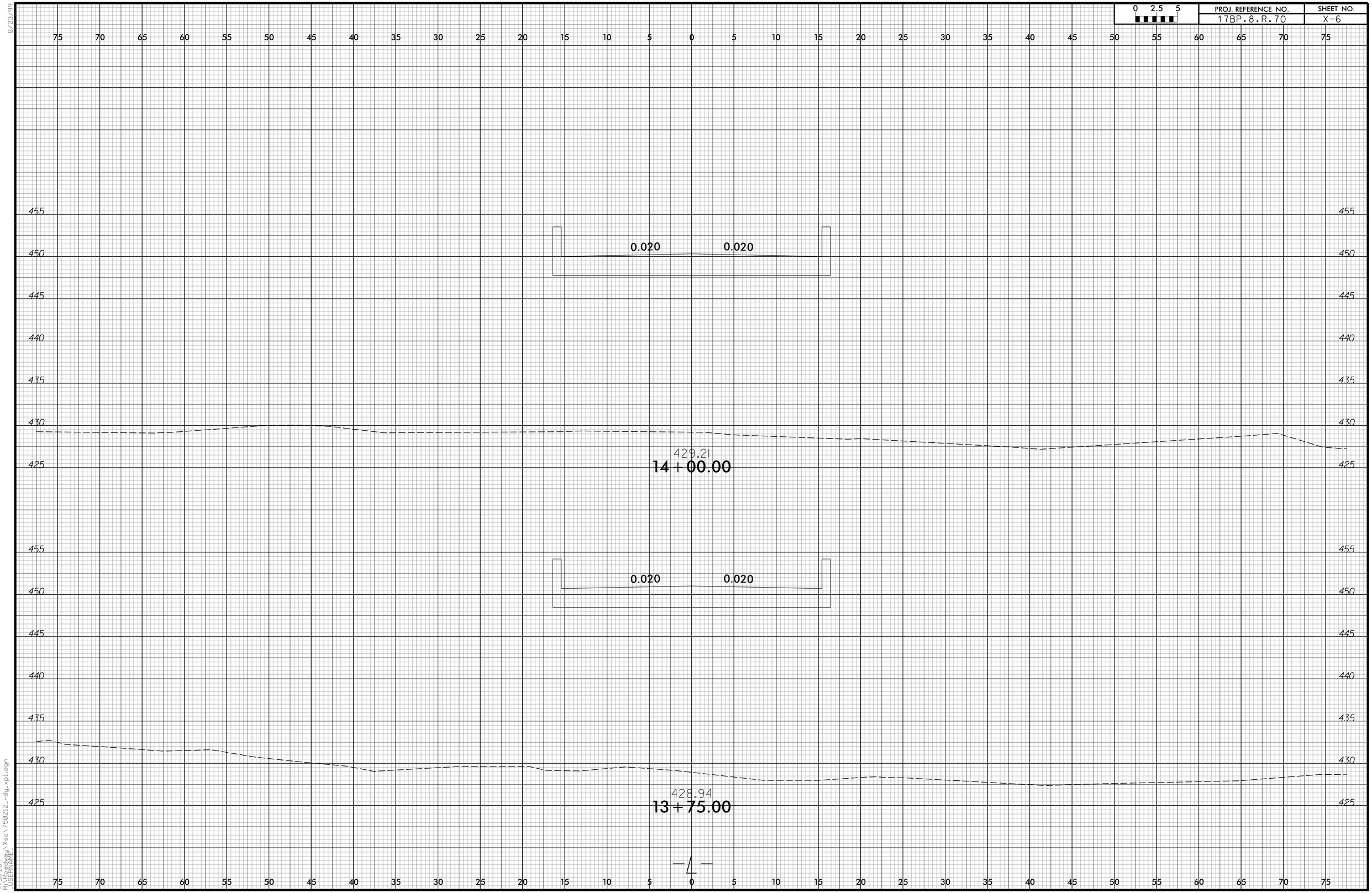


8/23/99

7/31/2017
R:\Roadway\Xsc\750212_rdy_xpl.dgn
USERNAME

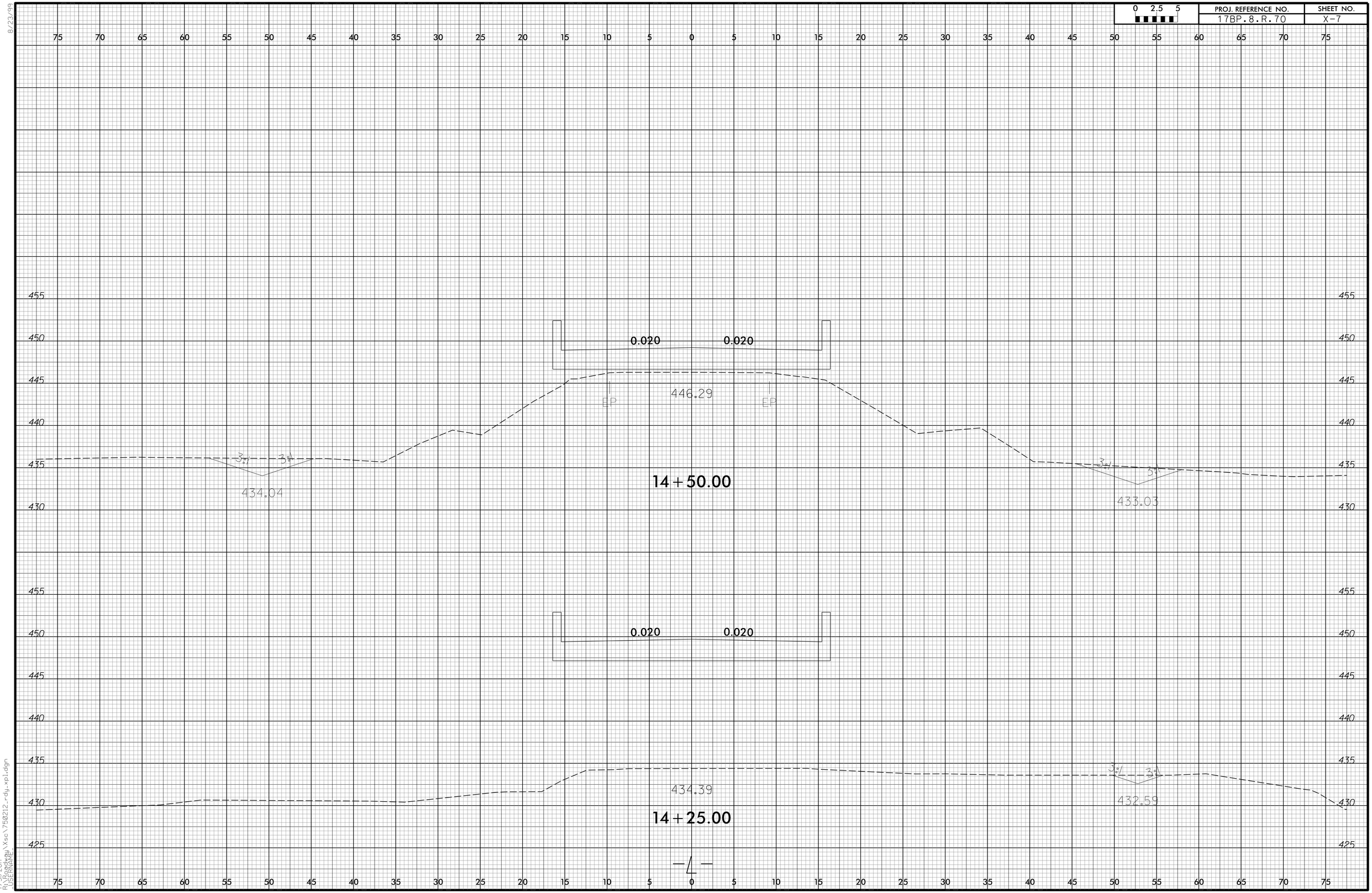


8/23/99

7/31/2017
R:\Roadway\Xsc\750212_rdy_xpl.dgn
USERNAME

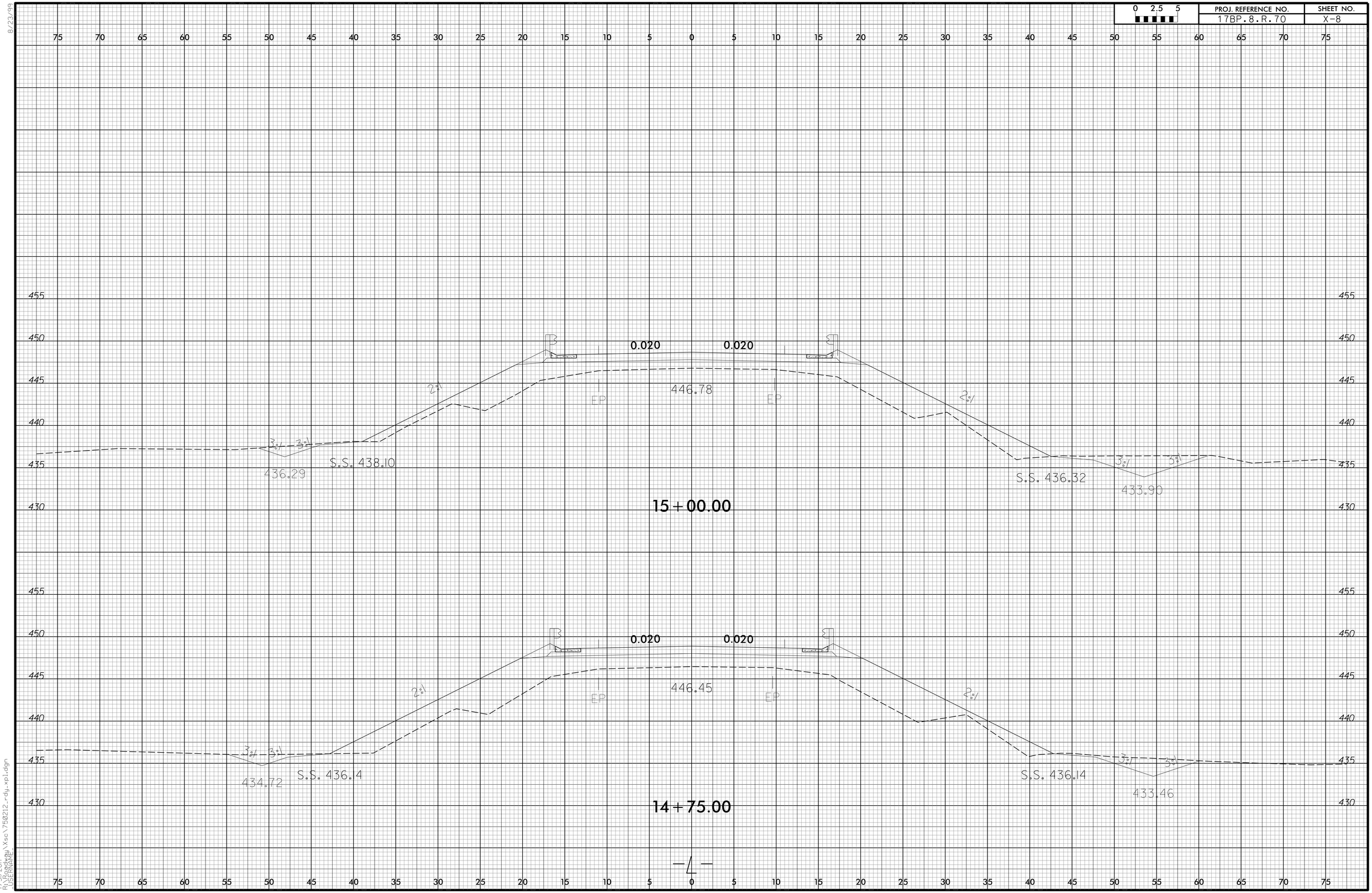


8/23/99

7/31/2017
R:\Roadway\Xsc\750212_rdy_xpl.dgn
USERNAME

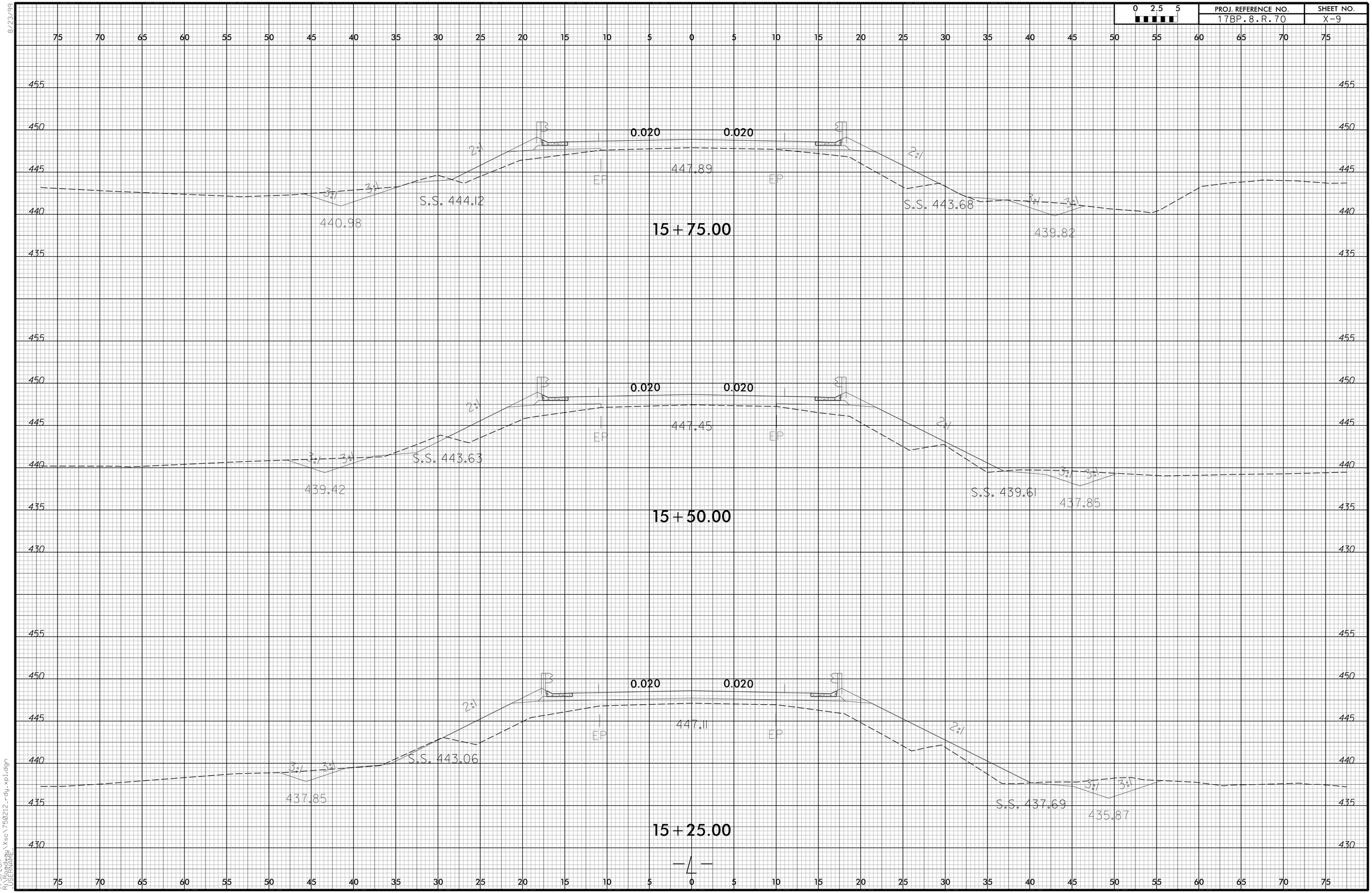


8/23/99

7/31/2017
R:\Roadway\Xsc\750212_rdy_xpl.dgn
USERNAME

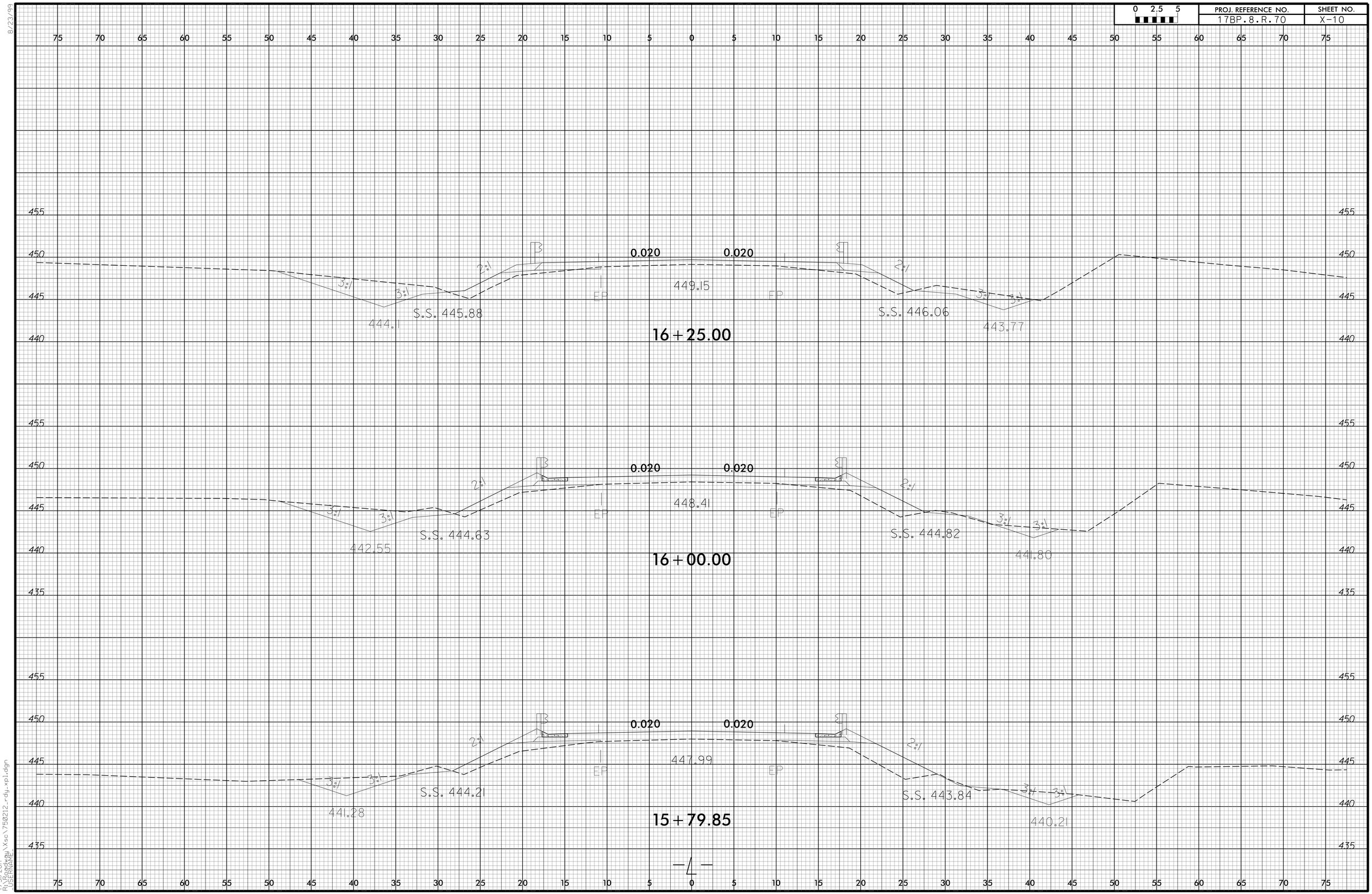


8/23/99

7/31/2017
R:\Roadway\Xsc\750212_rdy_xpl.dgn
USERNAME

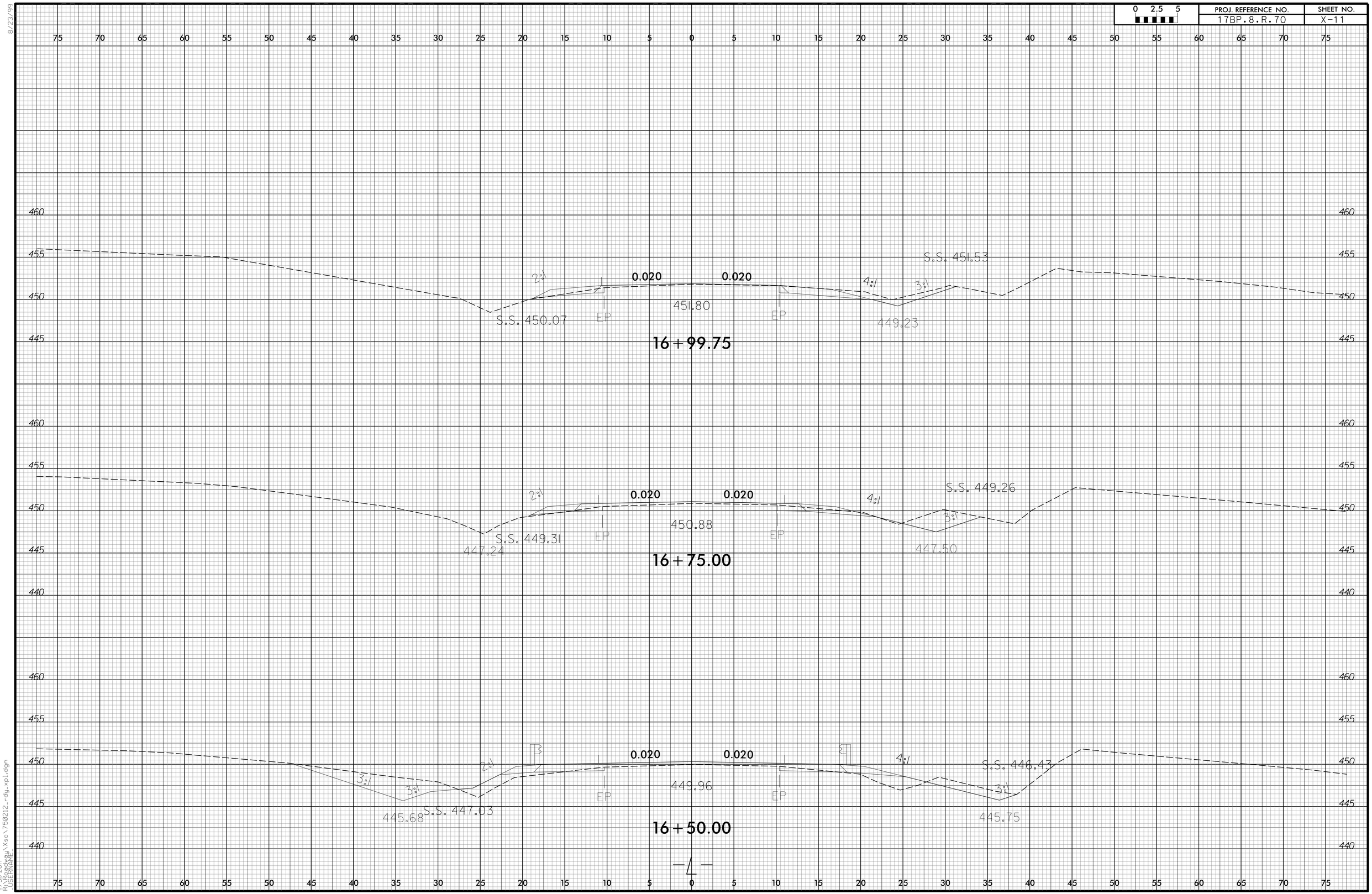


8/23/99

7/31/2017
R:\Roadway\Xsc\750212_rdy_xpl.dgn
USERNAME

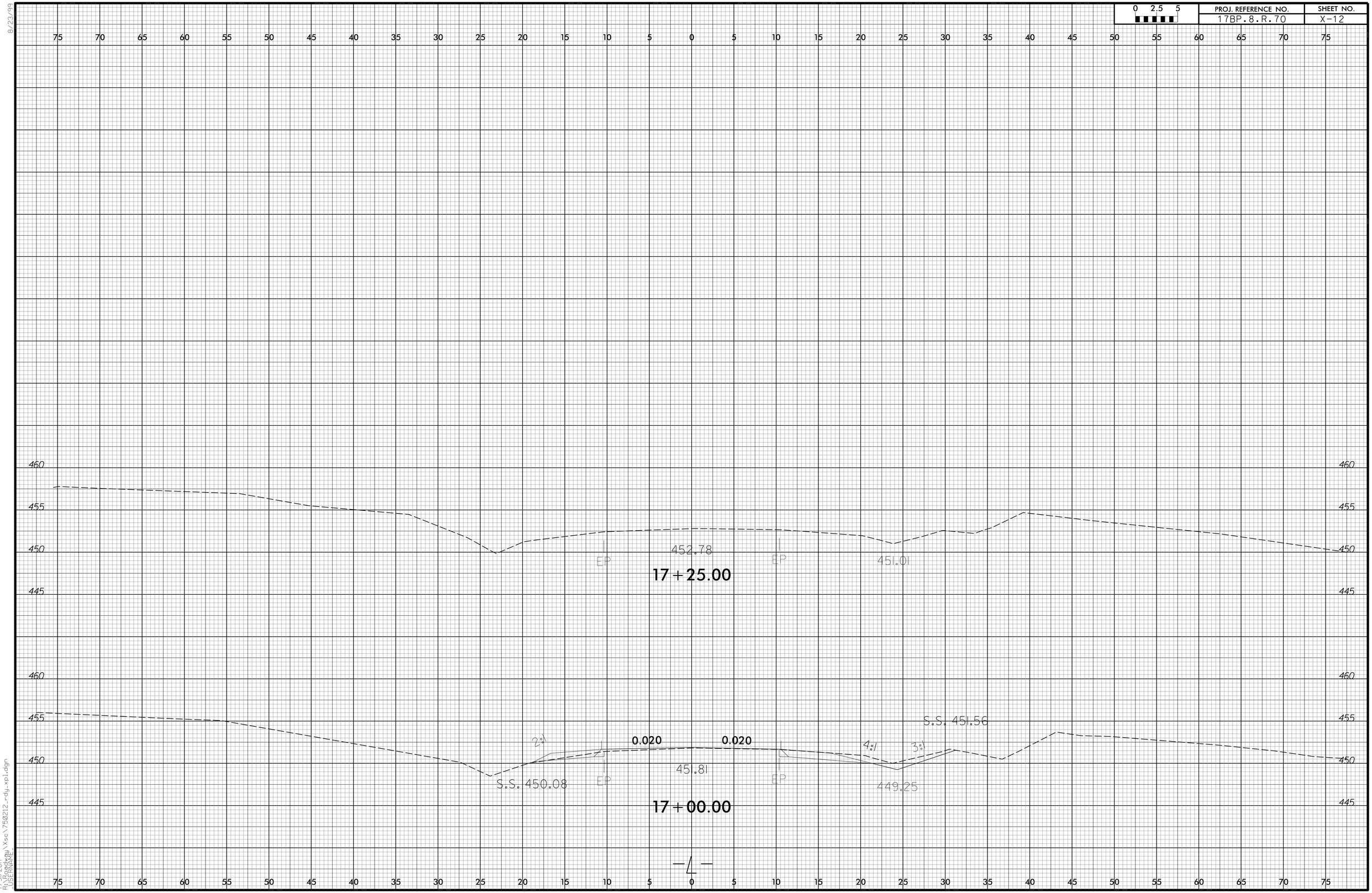


8/23/99

7/31/2017
R:\Roadway\Xsc\750212_rdy_xpl.dgn
USERNAME

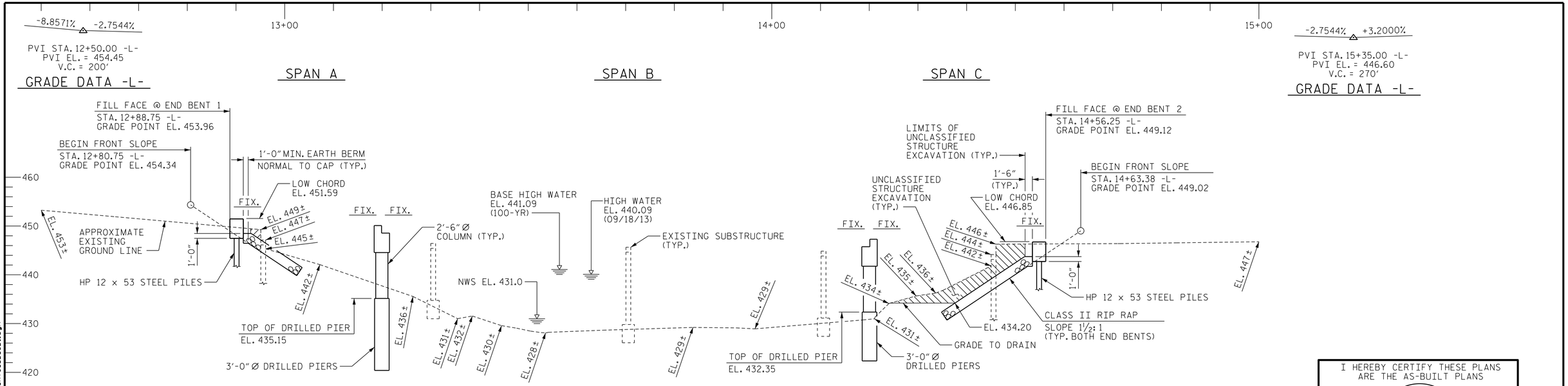


## SECTION ALONG -L-

(SECTION TAKEN AT RIGHT ANGLES TO END BENTS AND BENTS)

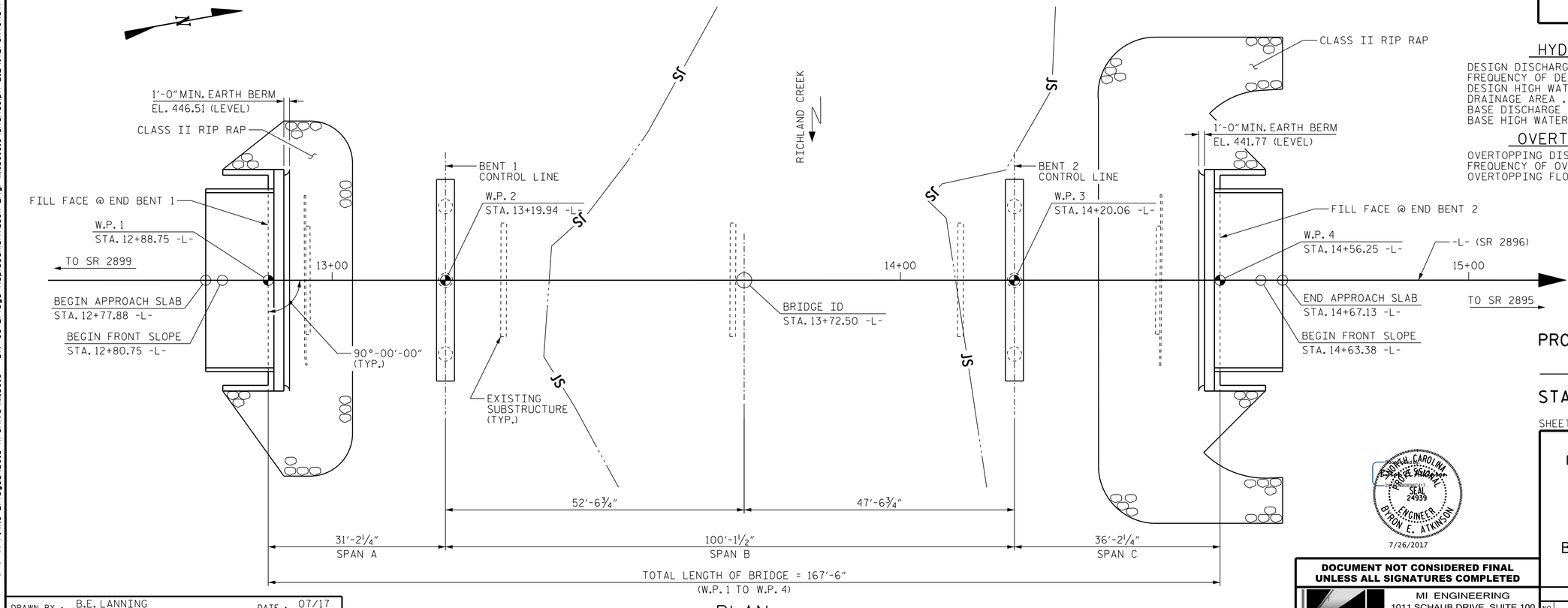


## PLAN

(PILES NOT SHOWN FOR CLARITY)

I HEREBY CERTIFY THESE PLANS ARE THE AS-BUILT PLANS

### HYDROGRAPHIC DATA

| | |
|---|---|
| DESIGN DISCHARGE | = 6200 CFS |
| FREQUENCY OF DESIGN FLOOD | = 25 YRS. |
| DESIGN HIGH WATER ELEVATION | = 439.5 |
| DRAINAGE AREA | = 57.0 SQ. MI. |
| BASE DISCHARGE (Q100) | = 8600 CFS |
| BASE HIGH WATER ELEVATION | = 441.09 |

### OVERTOPPING FLOOD DATA

| | |
|---|---|
| OVERTOPPING DISCHARGE | = 23550 CFS |
| FREQUENCY OF OVERTOPPING FLOOD | = 500+ YRS. |
| OVERTOPPING FLOOD ELEVATION | = 448.60 |

PROJECT NO. 17BP.8.R.70

RANDOLPH COUNTY

STATION: 13+72.50 -L-

SHEET 1 OF 3 REPLACES BRIDGE NO. 212

STATE OF NORTH CAROLINA
DEPARTMENT OF TRANSPORTATION
RALEIGH

# GENERAL DRAWING
FOR BRIDGE ON SR 2896
OVER RICHLAND CREEK
BETWEEN SR 2899 & SR 2895

SOUTH CAROLINA PROFESSIONAL SEAL 24939 ENGINEER BYRON E. ATKINSON
7/26/2017

**DOCUMENT NOT CONSIDERED FINAL UNLESS ALL SIGNATURES COMPLETED**


MI ENGINEERING
1011 SCHAUB DRIVE, SUITE 100
RALEIGH, NC 27606
(919) 851-6606
FIRM PE NUMBER : P-0671


| REVISIONS | | | | | | SHEET NO. |
|---|---|---|---|---|---|---|
| NO. | BY: | DATE: | NO. | BY: | DATE: | S-1 |
| 1 | | | 3 | | | TOTAL SHEETS |
| 2 | | | 4 | | | 26 |

| | | | |
|---|---|---|---|
| DRAWN BY : | B.E. LANNING | DATE : | 07/17 |
| CHECKED BY : | B.E. ATKINSON | DATE : | 07/17 |
| DESIGN ENGINEER OF RECORD : | B.E. ATKINSON | DATE : | 07/17 |


7/26/2017
3:05:32 PM
User: blanning
Filename: P:\NC Bridges\2013 Archive\M13010 - Div 08 Bridge Replacements_CH Engr\M13010.04_Randolph 212\17BP8R70\Structures\401_001_17BP8R70_SD_GDI.dgn

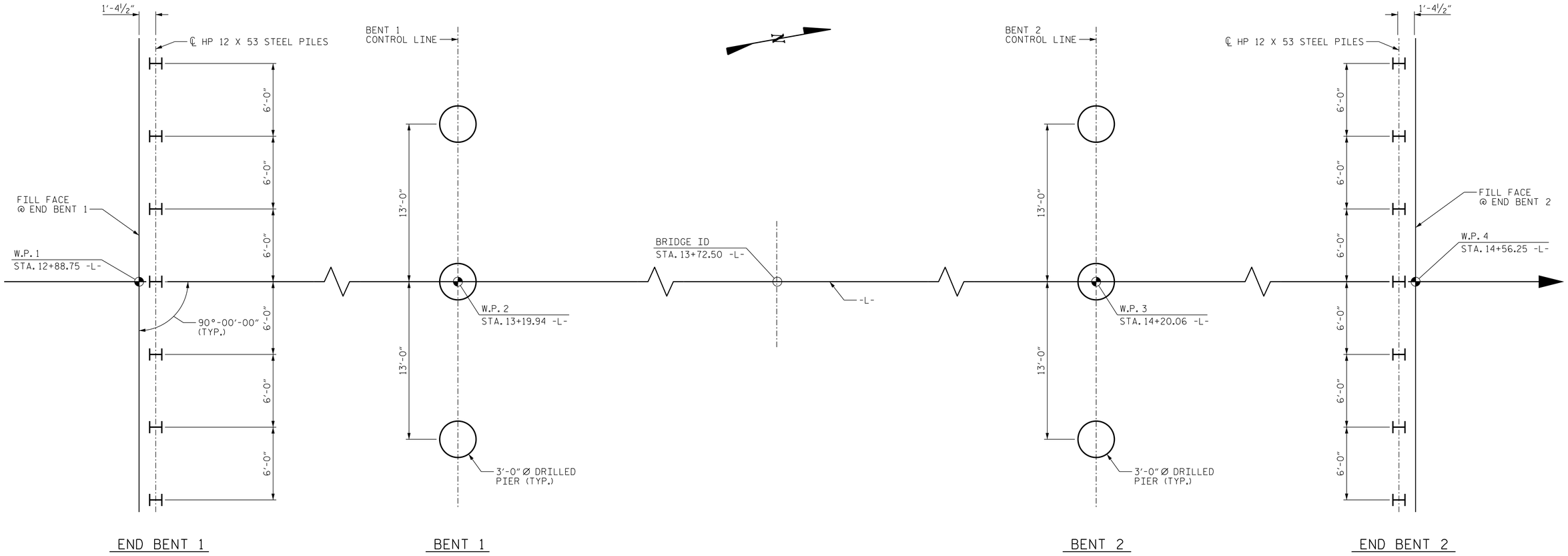


# FOUNDATION LAYOUT

DIMENSIONS LOCATIONG END BENT PILES AND BENT DRILLED PIERS
ARE SHOWN TO CENTERLINE PILES AND DRILLED PIERS.

## NOTES

FOR PILES, SEE GEOTECHNICAL SPECIAL PROVISIONS AND SECTION 450 OF THE STANDARD SPECIFICATIONS.

PILES AT END BENT NO. 1 AND END BENT NO. 2 ARE DESIGNED FOR A FACTORED RESISTANCE OF 55 TONS PER PILE.

DRIVE PILES AT END BENT NO. 1 AND END BENT NO. 2 TO A REQUIRED DRIVING RESISTANCE OF 95 TONS PER PILE.

STEEL H-PILE POINTS ARE REQUIRED FOR STEEL H-PILES AT END BENT NO. 1 AND END BENT NO. 2. FOR STEEL PILE POINTS, SEE SECTION 450 OF THE STANDARD SPECIFICATIONS.

FOR DRILLED PIERS, SEE GEOTECHNICAL SPECIAL PROVISIONS AND SECTION 411 OF THE STANDARD SPECIFICATIONS.

DRILLED PIERS AT BENT NO. 1 AND BENT NO. 2 ARE DESIGNED FOR A FACTORED RESISTANCE OF 425 TONS PER PIER. CHECK FIELD CONDITIONS FOR THE REQUIRED TIP RESISTANCE OF 30 TSF.

INSTALL DRILLED PIERS AT BENT NO. 1 TO A TIP ELEVATION NO HIGHER THAN 420.50 FT. AND WITH THE REQUIRED TIP RESISTANCE.

INSTALL DRILLED PIERS AT BENT NO. 2 TO A TIP ELEVATION NO HIGHER THAN 422.50 FT. AND WITH THE REQUIRED TIP RESISTANCE.

PERMANENT STEEL CASINGS ARE REQUIRED FOR DRILLED PIERS AT BENT NO. 1 AND BENT NO. 2. DO NOT EXTEND PERMANENT CASINGS BELOW ELEVATION 430 FT. WITHOUT PRIOR APPROVAL FROM THE ENGINEER.

THE SCOUR CRITICAL ELEVATION FOR BENT NO. 1 AND BENT NO. 2 IS ELEVATION 428 FT. SCOUR CRITICAL ELEVATIONS ARE USED TO MONITOR POSSIBLE SCOUR PROBLEMS DURING THE LIFE OF THE STRUCTURE.

CSL TUBES ARE REQUIRED AND CSL TESTING MAY BE REQUIRED FOR DRILLED PIERS. THE ENGINEER WILL DETERMINE THE NEED FOR CSL TESTING. FOR CSL TESTING, SEE SECTION 411 OF THE STANDARD SPECIFICATIONS.

SID INSPECTIONS MAY BE REQUIRED FOR DRILLED PIERS. THE ENGINEER WILL DETERMINE THE NEED FOR SID INSPECTIONS. FOR SID INSPECTIONS, SEE SECTION 411 OF THE STANDARD SPECIFICATIONS.

PROJECT NO. 17BP.8.R.70

RANDOLPH COUNTY

STATION: 13+72.50 -L-

SHEET 2 OF 3

NORTH CAROLINA PROFESSIONAL ENGINEER SEAL 24939 BYRON E. ATKINSON

7/26/2017

**DOCUMENT NOT CONSIDERED FINAL UNLESS ALL SIGNATURES COMPLETED**

MI ENGINEERING
1011 SCHAUB DRIVE, SUITE 100
RALEIGH, NC 27606
(919) 851-6606
FIRM PE NUMBER : P-0671

| REVISIONS | | | | | | SHEET NO. |
|---|---|---|---|---|---|---|
| NO. | BY: | DATE: | NO. | BY: | DATE: | S-2 |
| 1 | | | 3 | | | TOTAL SHEETS |
| 2 | | | 4 | | | 26 |

STATE OF NORTH CAROLINA
DEPARTMENT OF TRANSPORTATION
RALEIGH

# GENERAL DRAWING

FOR BRIDGE ON SR 2896
OVER RICHLAND CREEK
BETWEEN SR 2899 & SR 2895

| | | | |
|---|---|---|---|
| DRAWN BY : | B.E. LANNING | DATE : | 07/17 |
| CHECKED BY : | B.E. ATKINSON | DATE : | 07/17 |
| DESIGN ENGINEER OF RECORD : | B.E. ATKINSON | DATE : | 07/17 |

7/26/2017
3:05:34 PM
User: blanning
Filename: P:\NC Bridges\2013 Archive\MI3010 - Div 08 Bridge Replacements_CH Engr\MI3010.04_Randolph 212\17BPR70\Structures\401_003_17BPR70_SD_GD2.dgn

B.M. #1: R/R SPIKE IN BASE OF 24" SWEET GUM; 62.81' RT. OF STA. 14+29.76 -L-, EL. 435.65

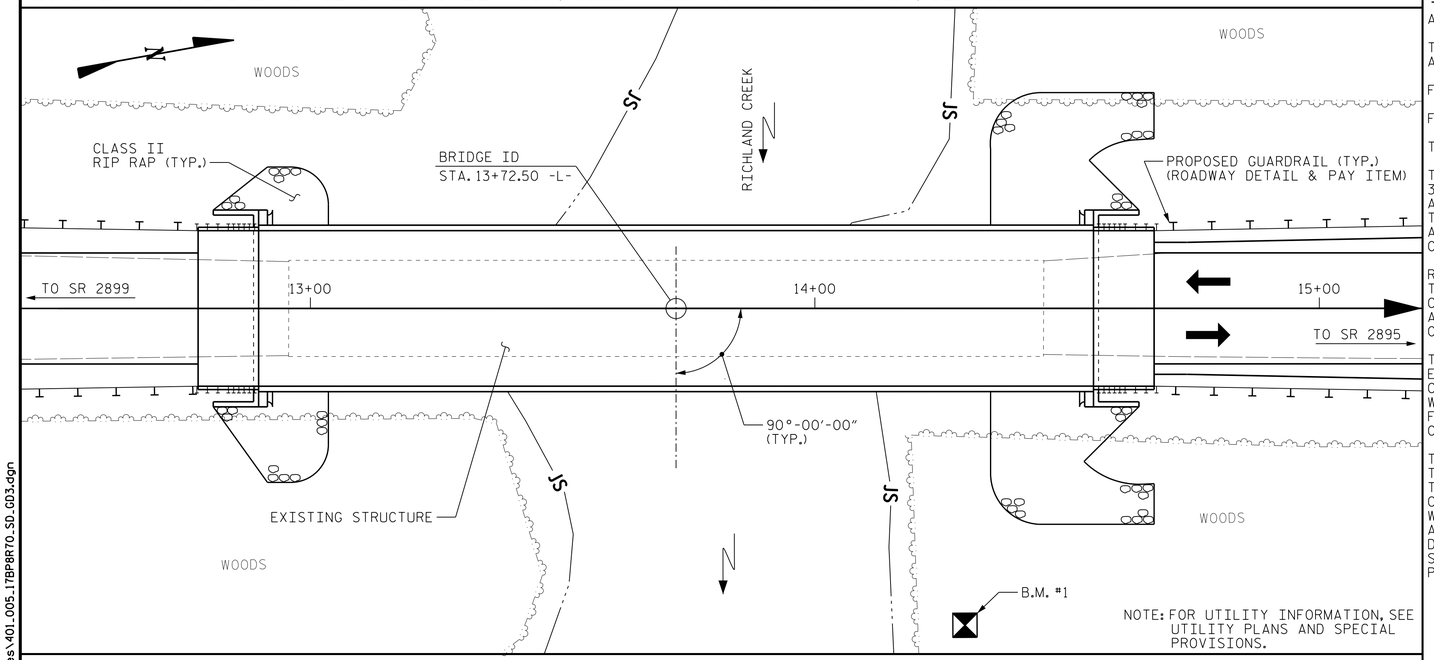


LOCATION SKETCH

## NOTES

ASSUMED LIVE LOAD = HL-93 OR ALTERNATE LOADING.

THIS BRIDGE HAS BEEN DESIGNED IN ACCORDANCE WITH THE AASHTO LRFD BRIDGE DESIGN SPECIFICATIONS.

FOR OTHER DESIGN DATA AND GENERAL NOTES, SEE SHEET SN.

FOR EROSION CONTROL MEASURES SEE EROSION CONTROL PLANS.

THIS BRIDGE IS LOCATED IN SEISMIC ZONE 1.

THE EXISTING STRUCTURE CONSISTING OF FOUR SPANS (1 @ 35'-5", 2 @ 40'-1", 1 @ 35'-5") WITH A TIMBER DECK ON I-BEAMS AND A CLEAR ROADWAY WIDTH OF 19'-2" ON TIMBER CAP WITH TIMBER PILE END BENTS AND TIMBER CAP WITH TIMBER PILES AND CONCRETE SILLS AT BENTS 1 THRU 3 LOCATED AT THE SITE OF THE PROPOSED STRUCTURE SHALL BE REMOVED.

REMOVAL OF THE EXISTING BRIDGE SHALL BE PERFORMED SO AS TO NOT ALLOW DEBRIS TO FALL INTO THE WATER. THE CONTRACTOR SHALL SUBMIT DEMOLITION PLANS FOR REVIEW AND REMOVE THE BRIDGE IN ACCORDANCE WITH ARTICLE 402-2 OF THE STANDARD SPECIFICATIONS.

THE MATERIAL SHOWN IN THE CROSS-HATCHED AREA SHALL BE EXCAVATED FOR A DISTANCE OF 50 FT. EACH SIDE OF THE CENTERLINE ROADWAY AS DIRECTED BY THE ENGINEER. THIS WORK WILL BE PAID FOR AT THE CONTRACT LUMP SUM PRICE FOR UNCLASSIFIED STRUCTURE EXCAVATION. SEE SECTION 412 OF THE STANDARD SPECIFICATIONS.

THE SUBSTRUCTURE OF THE EXISTING BRIDGE INDICATED ON THE PLANS IS FROM THE BEST INFORMATION AVAILABLE. THIS INFORMATION IS SHOWN FOR THE CONVENIENCE OF THE CONTRACTOR. THE CONTRACTOR SHALL HAVE NO CLAIM WHATSOEVER AGAINST THE DEPARTMENT OF TRANSPORTATION FOR ANY DELAYS OR ADDITIONAL COST INCURRED BASED ON THE DIFFERENCES BETWEEN THE EXISTING BRIDGE SUBSTRUCTURE SHOWN ON THE PLANS AND THE ACTUAL CONDITIONS AT THE PROJECT SITE.

INASMUCH AS THE PAINT SYSTEM ON THE EXISTING STRUCTURAL STEEL CONTAINS LEAD, THE CONTRACTOR'S ATTENTION IS DIRECTED TO ARTICLE 107-1 OF THE STANDARD SPECIFICATIONS. ANY COSTS RESULTING FROM COMPLIANCE WITH APPLICABLE STATE OR FEDERAL REGULATIONS PERTAINING TO HANDLING OF MATERIALS CONTAINING LEAD BASED PAINT SHALL BE INCLUDED IN THE BID PRICE FOR "REMOVAL OF EXISTING STRUCTURE AT STATION 13+72.50 -L-."

ASPHALT WEARING SURFACE IS INCLUDED IN THE ROADWAY QUANTITY. SEE ROADWAY QUANTITIES.

THIS STRUCTURE HAS BEEN DESIGNED IN ACCORDANCE WITH "HEC 18 - EVALUATING SCOUR AT BRIDGES".

THE SCOUR CRITICAL ELEVATION FOR BENT NO. 1 AND BENT NO. 2 IS ELEVATION 428.0 FT. SCOUR CRITICAL ELEVATIONS ARE USED TO MONITOR POSSIBLE SCOUR PROBLEMS DURING THE LIFE OF THE STRUCTURE.

THE LOCATION OF THE CONSTRUCTION JOINT IN THE DRILLED PIERS IS BASED ON AN APPROXIMATE GROUND LINE ELEVATION. IF THE CONSTRUCTION JOINT IS ABOVE THE ACTUAL GROUND LINE ELEVATION, THE CONTRACTOR SHALL PLACE THE CONSTRUCTION JOINT ONE FOOT BELOW THE GROUND LINE.

FOR FALSEWORK AND FORMWORK, SEE SPECIAL PROVISIONS.

FOR SUBMITTAL OF WORKING DRAWINGS, SEE SPECIAL PROVISIONS.

FOR CRANE SAFETY, SEE SPECIAL PROVISIONS.

FOR GROUT FOR STRUCTURES, SEE SPECIAL PROVISIONS.

FOR ASBESTOS ASSESSMENT, SEE SPECIAL PROVISIONS.

AT THE CONTRACTOR'S OPTION, PRESTRESSED CONCRETE END BENT AND BENT CAPS MAY BE SUBSTITUTED IN PLACE OF THE CAST-IN-PLACE CAPS. THE CONTRACTOR SHALL COORDINATE WITH THE RESIDENT ENGINEER TO RECEIVE REVISED PLANS AND DETAILS FROM THE STRUCTURES MANAGEMENT UNIT. THE REDESIGN AND ANY ADDITIONAL MATERIALS NEEDED WILL BE AT NO ADDITIONAL COST TO THE CONTRACTOR.

## TOTAL BILL OF MATERIAL

| | REMOVAL OF EXISTING STRUCTURE | 3'-0" Ø DRILLED PIER IN SOIL | 3'-0" Ø DRILLED PIER NOT IN SOIL | PERMANENT STEEL CASING FOR 3'-0" Ø DRILLED PIER | SID INSPECTION | CSL TESTING | UNCLASSIFIED STRUCTURE EXCAVATION | CLASS A CONCRETE | BRIDGE APPROACH SLABS | REINFORCING STEEL | SPIRAL COLUMN REINFORCING STEEL | PILE DRIVING EQUIPMENT SETUP FOR HP 12 X 53 STEEL PILES | HP 12 X 53 STEEL PILES | | STEEL PILE POINTS | VERTICAL CONCRETE BARRIER RAIL | RIP RAP CLASS II (2'-0" THICK) | GEOTEXTILE FOR DRAINAGE | ELASTOMERIC BEARINGS | 3'-0" x 3'-3" PRESTRESSED CONCRETE BOX BEAMS | | 3'-0" x 1'-9" PRESTRESSED CONCRETE CORED SLABS | | ASBESTOS ASSESSMENT |
|---|---|---|---|---|---|---|---|---|---|---|---|---|---|---|---|---|---|---|---|---|---|---|---|---|
| | LUMP SUM | LIN. FT. | LIN. FT. | LIN. FT. | EACH | EACH | LUMP SUM | CU. YDS. | LUMP SUM | LBS. | LBS. | EACH | NO. | LIN. FT. | EACH | LIN. FT. | TON | SQ. YDS. | LUMP SUM | NO. | LIN. FT. | NO. | LIN. FT. | LUMP SUM |
| SUPERSTRUCTURE | | | | | | | | | LUMP SUM | | | | | | | 330.50 | | | LUMP SUM | 11 | 1100.00 | 22 | 715.00 | |
| | | | | | | | | | | | | | | | | | | | | | | | | |
| END BENT 1 | | | | | | | LUMP SUM | 21.6 | | 2636 | | 7 | 7 | 105 | 7 | | 111 | 123 | | | | | | |
| BENT 1 | | 18.3 | 26.0 | 15.0 | | | | 25.3 | | 10895 | 1286 | | | | | | | | | | | | | |
| BENT 2 | | 5.0 | 25.0 | 6.8 | | | | 25.2 | | 9986 | 1048 | | | | | | | | | | | | | |
| END BENT 2 | | | | | | | LUMP SUM | 21.6 | | 2636 | | 7 | 7 | 105 | 7 | | 249 | 277 | | | | | | |
| | | | | | | | | | | | | | | | | | | | | | | | | |
| TOTAL | LUMP SUM | 23.3 | 51.0 | 21.8 | 1 | 1 | LUMP SUM | 93.7 | LUMP SUM | 26153 | 2334 | 14 | 14 | 210 | 14 | 330.50 | 360 | 400 | LUMP SUM | 11 | 1100.00 | 22 | 715.00 | LUMP SUM |

PROJECT NO. 17BP.8.R.70

RANDOLPH COUNTY

STATION: 13+72.50 -L-

SHEET 3 OF 3

NORTH CAROLINA PROFESSIONAL ENGINEER SEAL 24939 BYRON E. ATKINSON

7/26/2017

STATE OF NORTH CAROLINA
DEPARTMENT OF TRANSPORTATION
RALEIGH

# GENERAL DRAWING
FOR BRIDGE ON SR 2896
OVER RICHLAND CREEK
BETWEEN SR 2899 & SR 2895

**DOCUMENT NOT CONSIDERED FINAL UNLESS ALL SIGNATURES COMPLETED**

MI ENGINEERING
1011 SCHAUB DRIVE, SUITE 100
RALEIGH, NC 27606
(919) 851-6606
FIRM PE NUMBER : P-0671

| REVISIONS | | | | | | SHEET NO. |
|---|---|---|---|---|---|---|
| NO. | BY: | DATE: | NO. | BY: | DATE: | S-3 |
| 1 | | | 3 | | | TOTAL SHEETS |
| 2 | | | 4 | | | 26 |

DRAWN BY : B.E. LANNING DATE : 07/17
CHECKED BY : B.E. ATKINSON DATE : 07/17
DESIGN ENGINEER OF RECORD : B.E. ATKINSON DATE : 07/17

7/26/2017
3:05:36 PM
User: blanning
Filename: P:\NC Bridges\2013 Archive\WI3010 - Div 08 Bridge Replacements_CH Engr\WI3010.04_Randolph 212\17BP8R70\Structures\401_005_17BP8R70_SD_GD3.dgn

# LOAD AND RESISTANCE FACTOR RATING (LRFD) SUMMARY FOR PRESTRESSED CONCRETE GIRDERS

| LEVEL | | VEHICLE | WEIGHT (W) (TONS) | CONTROLLING LOAD RATING | MINIMUM RATING FACTORS (RF) | TONS = W X RF | STRENGTH I LIMIT STATE | | | | | | | | | | SERVICE III LIMIT STATE | | | | | | COMMENT NUMBER |
|---|---|---|---|---|---|---|---|---|---|---|---|---|---|---|---|---|---|---|---|---|---|---|---|
| | | | | | | | | MOMENT | | | | | SHEAR | | | | | MOMENT | | | | | | |
| | | | | | | | LIVELOAD FACTORS | DISTRIBUTION FACTORS (DF) | RATING FACTOR | SPAN | GIRDER LOCATION | DISTANCE FROM LEFT END OF SPAN (ft) | DISTRIBUTION FACTORS (DF) | RATING FACTOR | SPAN | GIRDER LOCATION | DISTANCE FROM LEFT END OF SPAN (ft) | LIVELOAD FACTORS | DISTRIBUTION FACTORS (DF) | RATING FACTOR | SPAN | GIRDER LOCATION | DISTANCE FROM LEFT END OF SPAN (ft) | |
| DESIGN LOAD RATING | | HL-93(Inv) | N/A | 1 | 1.037 | -- | 1.75 | 0.283 | 1.83 | 30′ | EL | 14.5 | 0.574 | **1.04** | 30′ | EL | **1.45** | 0.80 | 0.283 | 1.58 | 30′ | EL | 14.5 | |
| | | HL-93(Opr) | N/A | -- | 1.344 | -- | 1.35 | 0.283 | 2.38 | 30′ | EL | 14.5 | 0.574 | 1.34 | 30′ | EL | 1.45 | N/A | -- | -- | -- | -- | -- | |
| | | HS-20(Inv) | 36.000 | 2 | 1.183 | 42.587 | 1.75 | 0.283 | 2.53 | 30′ | EL | 11.6 | 0.574 | **1.18** | 30′ | EL | **1.45** | 0.80 | 0.283 | 2.20 | 30′ | EL | 11.6 | |
| | | HS-20(Opr) | 36.000 | -- | 1.533 | 55.205 | 1.35 | 0.283 | 3.28 | 30′ | EL | 11.6 | 0.574 | 1.53 | 30′ | EL | 1.45 | N/A | -- | -- | -- | -- | -- | |
| LEGAL LOAD RATING | SV | SNSH | 13.500 | -- | 2.895 | 39.081 | 1.4 | 0.283 | 5.18 | 30′ | EL | 14.5 | 0.574 | 2.89 | 30′ | EL | 1.45 | 0.80 | 0.283 | 3.56 | 30′ | EL | 14.5 | |
| | | SNGARBS2 | 20.000 | -- | 2.240 | 44.792 | 1.4 | 0.283 | 4.53 | 30′ | EL | 11.6 | 0.574 | 2.24 | 30′ | EL | 1.45 | 0.80 | 0.283 | 3.15 | 30′ | EL | 11.6 | |
| | | SNAGRIS2 | 22.000 | -- | 2.157 | 47.463 | 1.4 | 0.283 | 4.6 | 30′ | EL | 11.6 | 0.574 | 2.16 | 30′ | EL | 1.45 | 0.80 | 0.283 | 3.20 | 30′ | EL | 11.6 | |
| | | SNCOTTS3 | 27.250 | -- | 1.462 | 39.849 | 1.4 | 0.283 | 2.6 | 30′ | EL | 14.5 | 0.574 | 1.46 | 30′ | EL | 1.45 | 0.80 | 0.283 | 1.79 | 30′ | EL | 14.5 | |
| | | SNAGGRS4 | 34.925 | -- | 1.346 | 46.999 | 1.4 | 0.283 | 2.5 | 30′ | EL | 14.5 | 0.574 | 1.35 | 30′ | EL | 1.45 | 0.80 | 0.283 | 1.72 | 30′ | EL | 14.5 | |
| | | SNS5A | 35.550 | -- | 1.427 | 50.733 | 1.4 | 0.283 | 2.42 | 30′ | EL | 14.5 | 0.574 | 1.43 | 30′ | EL | 1.45 | 0.80 | 0.283 | 1.67 | 30′ | EL | 14.5 | |
| | | SNS6A | 39.950 | -- | 1.341 | 53.59 | 1.4 | 0.283 | 2.29 | 30′ | EL | 14.5 | 0.574 | 1.34 | 30′ | EL | 1.45 | 0.80 | 0.283 | 1.58 | 30′ | EL | 14.5 | |
| | | SNS7B | 42.000 | -- | 1.369 | 57.505 | 1.4 | 0.283 | 2.23 | 30′ | EL | 14.5 | 0.574 | 1.37 | 30′ | EL | 1.45 | 0.80 | 0.283 | 1.53 | 30′ | EL | 14.5 | |
| | TTST | TNAGRIT3 | 33.000 | -- | 1.593 | 52.58 | 1.4 | 0.283 | 2.97 | 30′ | EL | 14.5 | 0.574 | 1.59 | 30′ | EL | 1.45 | 0.80 | 0.283 | 2.04 | 30′ | EL | 14.5 | |
| | | TNT4A | 33.075 | -- | 1.483 | 49.043 | 1.4 | 0.283 | 2.82 | 30′ | EL | 14.5 | 0.574 | 1.48 | 30′ | EL | 1.45 | 0.80 | 0.283 | 1.94 | 30′ | EL | 14.5 | |
| | | TNT6A | 41.600 | -- | 1.433 | 59.622 | 1.4 | 0.283 | 2.56 | 30′ | EL | 14.5 | 0.574 | 1.43 | 30′ | EL | 1.45 | 0.80 | 0.283 | 1.76 | 30′ | EL | 14.5 | |
| | | TNT7A | 42.000 | -- | 1.363 | 57.264 | 1.4 | 0.283 | 2.64 | 30′ | EL | 14.5 | 0.574 | 1.36 | 30′ | EL | 1.45 | 0.80 | 0.283 | 1.82 | 30′ | EL | 14.5 | |
| | | TNT7B | 42.000 | -- | 1.331 | 55.915 | 1.4 | 0.283 | 2.49 | 30′ | EL | 14.5 | 0.574 | 1.33 | 30′ | EL | 1.45 | 0.80 | 0.283 | 1.72 | 30′ | EL | 14.5 | |
| | | TNAGRIT4 | 43.000 | -- | 1.287 | 55.356 | 1.4 | 0.283 | 2.58 | 30′ | EL | 14.5 | 0.574 | 1.29 | 30′ | EL | 1.45 | 0.80 | 0.283 | 1.78 | 30′ | EL | 14.5 | |
| | | TNAGT5A | 45.000 | -- | 1.381 | 62.151 | 1.4 | 0.283 | 2.5 | 30′ | EL | 14.5 | 0.574 | 1.38 | 30′ | EL | 1.45 | 0.80 | 0.283 | 1.72 | 30′ | EL | 14.5 | |
| | | TNAGT5B | 45.000 | 3 | 1.212 | 54.54 | 1.4 | 0.283 | 2.41 | 30′ | EL | 11.6 | 0.574 | **1.21** | 30′ | EL | **1.45** | 0.80 | 0.283 | 1.66 | 30′ | EL | 11.6 | |

## LOAD FACTORS:

| DESIGN LOAD RATING FACTORS | LIMIT STATE | $\gamma_{DC}$ | $\gamma_{DW}$ |
|---|---|---|---|
| | STRENGTH I | 1.25 | 1.50 |
| | SERVICE III | 1.00 | 1.00 |

## NOTES:

MINIMUM RATING FACTORS ARE BASED ON THE STRENGTH I AND SERVICE III LIMIT STATES.

ALLOWABLE STRESSES FOR SERVICE III LIMIT STATE ARE AS REQUIRED FOR DESIGN.

## COMMENTS:

1.
2.
3.
4.

(#) CONTROLLING LOAD RATING

(1) DESIGN LOAD RATING (HL-93)

(2) DESIGN LOAD RATING (HS-20)

(3) LEGAL LOAD RATING **

** SEE CHART FOR VEHICLE TYPE

### GIRDER LOCATION

I - INTERIOR GIRDER
EL - EXTERIOR LEFT GIRDER
ER - EXTERIOR RIGHT GIRDER

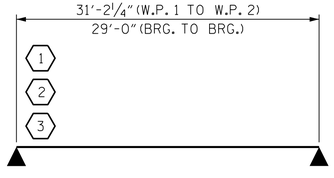


LRFR SUMMARY
FOR SPAN A

PROJECT NO. 17BP.8.R.70
RANDOLPH COUNTY
STATION: 13+72.50 -L-

NORTH CAROLINA PROFESSIONAL SEAL 24939 ENGINEER BYRON E. ATKINSON
7/26/2017

**DOCUMENT NOT CONSIDERED FINAL UNLESS ALL SIGNATURES COMPLETED**


MI ENGINEERING
1011 SCHAUB DRIVE, SUITE 100
RALEIGH, NC 27606
(919) 851-6606
FIRM PE NUMBER : P-0671


STATE OF NORTH CAROLINA
DEPARTMENT OF TRANSPORTATION
RALEIGH

STANDARD
LRFR SUMMARY FOR 30′ CORED SLAB UNIT 90° SKEW
(NON-INTERSTATE TRAFFIC)

| REVISIONS | | | | | | SHEET NO. |
|---|---|---|---|---|---|---|
| NO. | BY: | DATE: | NO. | BY: | DATE: | S-4 |
| 1 | | | 3 | | | TOTAL SHEETS |
| 2 | | | 4 | | | 26 |

| | | |
|---|---|---|
| ASSEMBLED BY: | B.E. LANNING | DATE: 07/17 |
| CHECKED BY : | B.E. ATKINSON | DATE: 07/17 |
| DESIGN ENGINEER OF RECORD: | B.E. ATKINSON | DATE: 07/17 |
| DRAWN BY : | CVC 6/10 | |
| CHECKED BY : | DNS 6/10 | |

STD. NO. 21LRFR1_90S_30L


7/26/2017
3:05:38 PM
User: blanning
Filename: P:\NC Bridges\2013 Archive\MI3010 - Div 08 Bridge Replacements_CH Engr\MI3010.04_Randolph 212\17BP8R70\Structures\401.007.17BP8R70_SD_LRFR1.dgn

# LOAD AND RESISTANCE FACTOR RATING (LRFD) SUMMARY FOR PRESTRESSED CONCRETE GIRDERS

| LEVEL | | VEHICLE | WEIGHT (W) (TONS) | CONTROLLING LOAD RATING | MINIMUM RATING FACTORS (RF) | TONS = W X RF | STRENGTH I LIMIT STATE | | | | | | | | | | | SERVICE III LIMIT STATE | | | | | | COMMENT NUMBER |
|---|---|---|---|---|---|---|---|---|---|---|---|---|---|---|---|---|---|---|---|---|---|---|---|---|
| | | | | | | | | MOMENT | | | | | SHEAR | | | | | | MOMENT | | | | | | |
| | | | | | | | LIVELOAD FACTORS | DISTRIBUTION FACTORS (DF) | RATING FACTOR | SPAN | GIRDER LOCATION | DISTANCE FROM LEFT END OF SPAN (ft) | DISTRIBUTION FACTORS (DF) | RATING FACTOR | SPAN | GIRDER LOCATION | DISTANCE FROM LEFT END OF SPAN (ft) | LIVELOAD FACTORS | DISTRIBUTION FACTORS (DF) | RATING FACTOR | SPAN | GIRDER LOCATION | DISTANCE FROM LEFT END OF SPAN (ft) | |
| DESIGN LOAD RATING | | HL-93(Inv) | N/A | 1 | 1.035 | -- | 1.75 | 0.272 | 1.26 | A | EL | 49.25 | 0.489 | 1.34 | A | EL | 4.925 | 0.80 | 0.272 | **1.04** | A | EL | **49.25** | |
| | | HL-93(Opr) | N/A | -- | 1.633 | -- | 1.35 | 0.272 | 1.63 | A | EL | 49.25 | 0.489 | 1.73 | A | EL | 4.925 | N/A | -- | -- | -- | -- | -- | |
| | | HS-20(Inv) | 36.000 | 2 | 1.44 | 51.84 | 1.75 | 0.272 | 1.75 | A | EL | 49.25 | 0.489 | 1.81 | A | EL | 4.925 | 0.80 | 0.272 | **1.44** | A | EL | **49.25** | |
| | | HS-20(Opr) | 36.000 | -- | 2.271 | 81.756 | 1.35 | 0.272 | 2.27 | A | EL | 49.25 | 0.489 | 2.35 | A | EL | 4.925 | N/A | -- | -- | -- | -- | -- | |
| LEGAL LOAD RATING | SV | SNSH | 13.500 | -- | 3.413 | 46.079 | 1.4 | 0.272 | 5.19 | A | EL | 49.25 | 0.489 | 5.59 | A | EL | 4.925 | 0.80 | 0.272 | 3.41 | A | EL | 49.25 | |
| | | SNGARBS2 | 20.000 | -- | 2.473 | 49.452 | 1.4 | 0.272 | 3.76 | A | EL | 49.25 | 0.489 | 3.91 | A | EL | 4.925 | 0.80 | 0.272 | 2.47 | A | EL | 49.25 | |
| | | SNAGRIS2 | 22.000 | -- | 2.313 | 50.885 | 1.4 | 0.272 | 3.52 | A | EL | 49.25 | 0.489 | 3.6 | A | EL | 4.925 | 0.80 | 0.272 | 2.31 | A | EL | 49.25 | |
| | | SNCOTTS3 | 27.250 | -- | 1.696 | 46.228 | 1.4 | 0.272 | 2.58 | A | EL | 49.25 | 0.489 | 2.78 | A | EL | 4.925 | 0.80 | 0.272 | 1.70 | A | EL | 49.25 | |
| | | SNAGGRS4 | 34.925 | -- | 1.39 | 48.556 | 1.4 | 0.272 | 2.11 | A | EL | 49.25 | 0.489 | 2.26 | A | EL | 4.925 | 0.80 | 0.272 | 1.39 | A | EL | 49.25 | |
| | | SNS5A | 35.550 | -- | 1.361 | 48.398 | 1.4 | 0.272 | 2.07 | A | EL | 49.25 | 0.489 | 2.27 | A | EL | 4.925 | 0.80 | 0.272 | 1.36 | A | EL | 49.25 | |
| | | SNS6A | 39.950 | -- | 1.238 | 49.456 | 1.4 | 0.272 | 1.88 | A | EL | 49.25 | 0.489 | 2.05 | A | EL | 4.925 | 0.80 | 0.272 | 1.24 | A | EL | 49.25 | |
| | | SNS7B | 42.000 | -- | 1.178 | 49.496 | 1.4 | 0.272 | 1.79 | A | EL | 49.25 | 0.489 | 2 | A | EL | 4.925 | 0.80 | 0.272 | 1.18 | A | EL | 49.25 | |
| | TTST | TNAGRIT3 | 33.000 | -- | 1.506 | 49.709 | 1.4 | 0.272 | 2.29 | A | EL | 49.25 | 0.489 | 2.46 | A | EL | 4.925 | 0.80 | 0.272 | 1.51 | A | EL | 49.25 | |
| | | TNT4A | 33.075 | -- | 1.51 | 49.942 | 1.4 | 0.272 | 2.3 | A | EL | 49.25 | 0.489 | 2.41 | A | EL | 4.925 | 0.80 | 0.272 | 1.51 | A | EL | 49.25 | |
| | | TNT6A | 41.600 | -- | 1.224 | 50.926 | 1.4 | 0.272 | 1.86 | A | EL | 49.25 | 0.489 | 2.09 | A | EL | 4.925 | 0.80 | 0.272 | 1.22 | A | EL | 49.25 | |
| | | TNT7A | 42.000 | -- | 1.225 | 51.442 | 1.4 | 0.272 | 1.86 | A | EL | 49.25 | 0.489 | 2.05 | A | EL | 4.925 | 0.80 | 0.272 | 1.22 | A | EL | 49.25 | |
| | | TNT7B | 42.000 | -- | 1.254 | 52.657 | 1.4 | 0.272 | 1.91 | A | EL | 49.25 | 0.489 | 1.96 | A | EL | 4.925 | 0.80 | 0.272 | 1.25 | A | EL | 49.25 | |
| | | TNAGRIT4 | 43.000 | -- | 1.203 | 51.711 | 1.4 | 0.272 | 1.83 | A | EL | 49.25 | 0.489 | 1.91 | A | EL | 4.925 | 0.80 | 0.272 | 1.20 | A | EL | 49.25 | |
| | | TNAGT5A | 45.000 | -- | 1.139 | 51.236 | 1.4 | 0.272 | 1.73 | A | EL | 49.25 | 0.489 | 1.87 | A | EL | 4.925 | 0.80 | 0.272 | 1.14 | A | EL | 49.25 | |
| | | TNAGT5B | 45.000 | 3 | 1.129 | 50.805 | 1.4 | 0.272 | 1.72 | A | EL | 49.25 | 0.489 | 1.82 | A | EL | 4.925 | 0.80 | 0.272 | **1.13** | A | EL | **49.25** | |

## LOAD FACTORS:

| DESIGN LOAD RATING FACTORS | LIMIT STATE | $\gamma_{DC}$ | $\gamma_{DW}$ |
|---|---|---|---|
| | STRENGTH I | 1.25 | 1.50 |
| | SERVICE III | 1.00 | 1.00 |

## NOTES:

MINIMUM RATING FACTORS ARE BASED ON THE STRENGTH I AND SERVICE III LIMIT STATES.

ALLOWABLE STRESSES FOR SERVICE III LIMIT STATE ARE AS REQUIRED FOR DESIGN.

## COMMENTS:

1.
2.
3.
4.

(#) CONTROLLING LOAD RATING

(1) DESIGN LOAD RATING (HL-93)

(2) DESIGN LOAD RATING (HS-20)

(3) LEGAL LOAD RATING **

** SEE CHART FOR VEHICLE TYPE

GIRDER LOCATION

I - INTERIOR GIRDER
EL - EXTERIOR LEFT GIRDER
ER - EXTERIOR RIGHT GIRDER

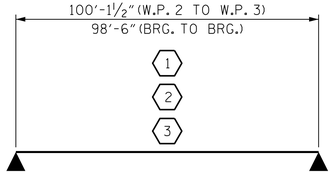


LRFR SUMMARY
FOR SPAN B

PROJECT NO. 17BP.8.R.70
RANDOLPH COUNTY
STATION: 13+72.50 -L-

7/26/2017

**DOCUMENT NOT CONSIDERED FINAL UNLESS ALL SIGNATURES COMPLETED**

MI ENGINEERING
1011 SCHAUB DRIVE, SUITE 100
RALEIGH, NC 27606
(919) 851-6606
FIRM PE NUMBER : P-0671

STATE OF NORTH CAROLINA
DEPARTMENT OF TRANSPORTATION
RALEIGH

STANDARD

LRFR SUMMARY FOR 100' BOX BEAM UNIT 90° SKEW (NON-INTERSTATE TRAFFIC)

| REVISIONS | | | | | | SHEET NO. |
|---|---|---|---|---|---|---|
| NO. | BY: | DATE: | NO. | BY: | DATE: | S-5 |
| 1 | | | 3 | | | TOTAL SHEETS |
| 2 | | | 4 | | | 26 |

| | | |
|---|---|---|
| ASSEMBLED BY: | B.E. LANNING | DATE: 07/17 |
| CHECKED BY : | B.E. ATKINSON | DATE: 07/17 |
| DESIGN ENGINEER OF RECORD: | B.E. ATKINSON | DATE: 07/17 |
| DRAWN BY : | TMG II/II | |
| CHECKED BY : | AAC II/II | |

STD. NO. 39LRFR1_90S_100L

7/26/2017
3:05:40 PM
User: blanning
Filename: P:\NC Bridges\2013 Archive\MI3010 - Div 08 Bridge Replacements_CH Engr\MI3010.04_Randolph 212\17BP8R70\Structures\401_009_17BP8R70_SD_LRFR2.dgn

# LOAD AND RESISTANCE FACTOR RATING (LRFD) SUMMARY FOR PRESTRESSED CONCRETE GIRDERS

| LEVEL | | VEHICLE | WEIGHT (W) (TONS) | CONTROLLING LOAD RATING | MINIMUM RATING FACTORS (RF) | TONS = W X RF | STRENGTH I LIMIT STATE | | | | | | | | | | | SERVICE III LIMIT STATE | | | | | | COMMENT NUMBER |
|---|---|---|---|---|---|---|---|---|---|---|---|---|---|---|---|---|---|---|---|---|---|---|---|---|
| | | | | | | | | MOMENT | | | | | SHEAR | | | | | | MOMENT | | | | | | |
| | | | | | | | LIVELOAD FACTORS | DISTRIBUTION FACTORS (DF) | RATING FACTOR | SPAN | GIRDER LOCATION | DISTANCE FROM LEFT END OF SPAN (ft) | DISTRIBUTION FACTORS (DF) | RATING FACTOR | SPAN | GIRDER LOCATION | DISTANCE FROM LEFT END OF SPAN (ft) | LIVELOAD FACTORS | DISTRIBUTION FACTORS (DF) | RATING FACTOR | SPAN | GIRDER LOCATION | DISTANCE FROM LEFT END OF SPAN (ft) | |
| DESIGN LOAD RATING | | HL-93(Inv) | N/A | 1 | 1.032 | -- | 1.75 | 0.28 | 1.36 | 35' | EL | 17 | 0.561 | **1.03** | 35' | EL | **1.7** | 0.80 | 0.28 | 1.05 | 35' | EL | 17 | |
| | | HL-93(Opr) | N/A | -- | 1.338 | -- | 1.35 | 0.28 | 1.77 | 35' | EL | 17 | 0.561 | 1.34 | 35' | EL | 1.7 | N/A | -- | -- | -- | -- | -- | |
| | | HS-20(Inv) | 36.000 | 2 | 1.189 | 42.810 | 1.75 | 0.28 | 1.79 | 35' | EL | 13.6 | 0.561 | **1.19** | 35' | EL | **1.7** | 0.80 | 0.28 | 1.39 | 35' | EL | 17 | |
| | | HS-20(Opr) | 36.000 | -- | 1.542 | 55.494 | 1.35 | 0.28 | 2.32 | 35' | EL | 13.6 | 0.561 | 1.54 | 35' | EL | 1.7 | N/A | -- | -- | -- | -- | -- | |
| LEGAL LOAD RATING | SV | SNSH | 13.500 | -- | 2.400 | 32.402 | 1.4 | 0.28 | 3.89 | 35' | EL | 17 | 0.561 | 3.06 | 35' | EL | 1.7 | 0.80 | 0.28 | 2.40 | 35' | EL | 17 | |
| | | SNGARBS2 | 20.000 | -- | 2.052 | 41.044 | 1.4 | 0.28 | 3.29 | 35' | EL | 13.6 | 0.561 | 2.32 | 35' | EL | 1.7 | 0.80 | 0.28 | 2.05 | 35' | EL | 13.6 | |
| | | SNAGRIS2 | 22.000 | -- | 2.053 | 45.174 | 1.4 | 0.28 | 3.26 | 35' | EL | 13.6 | 0.561 | 2.21 | 35' | EL | 1.7 | 0.80 | 0.28 | 2.05 | 35' | EL | 13.6 | |
| | | SNCOTTS3 | 27.250 | -- | 1.202 | 32.744 | 1.4 | 0.28 | 1.95 | 35' | EL | 17 | 0.561 | 1.54 | 35' | EL | 1.7 | 0.80 | 0.28 | 1.20 | 35' | EL | 17 | |
| | | SNAGGRS4 | 34.925 | -- | 1.111 | 38.816 | 1.4 | 0.28 | 1.8 | 35' | EL | 17 | 0.561 | 1.38 | 35' | EL | 1.7 | 0.80 | 0.28 | 1.11 | 35' | EL | 17 | |
| | | SNS5A | 35.550 | -- | 1.079 | 38.354 | 1.4 | 0.28 | 1.75 | 35' | EL | 17 | 0.561 | 1.46 | 35' | EL | 1.7 | 0.80 | 0.28 | 1.08 | 35' | EL | 17 | |
| | | SNS6A | 39.950 | -- | 1.041 | 41.601 | 1.4 | 0.28 | 1.69 | 35' | EL | 17 | 0.561 | 1.37 | 35' | EL | 1.7 | 0.80 | 0.28 | 1.04 | 35' | EL | 17 | |
| | | SNS7B | 42.000 | 3 | 1.000 | 41.734 | 1.4 | 0.28 | 1.61 | 35' | EL | 17 | 0.561 | 1.4 | 35' | EL | 1.7 | 0.80 | 0.28 | **1.00** | 35' | EL | **17** | |
| | TTST | TNAGRIT3 | 33.000 | -- | 1.286 | 42.439 | 1.4 | 0.28 | 2.08 | 35' | EL | 17 | 0.561 | 1.6 | 35' | EL | 1.7 | 0.80 | 0.28 | 1.29 | 35' | EL | 17 | |
| | | TNT4A | 33.075 | -- | 1.285 | 42.512 | 1.4 | 0.28 | 2.08 | 35' | EL | 17 | 0.561 | 1.51 | 35' | EL | 1.7 | 0.80 | 0.28 | 1.29 | 35' | EL | 17 | |
| | | TNT6A | 41.600 | -- | 1.126 | 46.84 | 1.4 | 0.28 | 1.82 | 35' | EL | 17 | 0.561 | 1.48 | 35' | EL | 1.7 | 0.80 | 0.28 | 1.13 | 35' | EL | 17 | |
| | | TNT7A | 42.000 | -- | 1.163 | 48.833 | 1.4 | 0.28 | 1.89 | 35' | EL | 17 | 0.561 | 1.37 | 35' | EL | 1.7 | 0.80 | 0.28 | 1.16 | 35' | EL | 17 | |
| | | TNT7B | 42.000 | -- | 1.144 | 48.061 | 1.4 | 0.28 | 1.85 | 35' | EL | 17 | 0.561 | 1.33 | 35' | EL | 1.7 | 0.80 | 0.28 | 1.14 | 35' | EL | 17 | |
| | | TNAGRIT4 | 43.000 | -- | 1.158 | 49.810 | 1.4 | 0.28 | 1.86 | 35' | EL | 13.6 | 0.561 | 1.28 | 35' | EL | 1.7 | 0.80 | 0.28 | 1.16 | 35' | EL | 17 | |
| | | TNAGT5A | 45.000 | -- | 1.068 | 48.071 | 1.4 | 0.28 | 1.73 | 35' | EL | 17 | 0.561 | 1.35 | 35' | EL | 1.7 | 0.80 | 0.28 | 1.07 | 35' | EL | 17 | |
| | | TNAGT5B | 45.000 | -- | 1.031 | 46.373 | 1.4 | 0.28 | 1.67 | 35' | EL | 17 | 0.561 | 1.21 | 35' | EL | 1.7 | 0.80 | 0.28 | 1.03 | 35' | EL | 17 | |

## LOAD FACTORS:

| DESIGN LOAD RATING FACTORS | LIMIT STATE | $\gamma_{DC}$ | $\gamma_{DW}$ |
|---|---|---|---|
| | STRENGTH I | 1.25 | 1.50 |
| | SERVICE III | 1.00 | 1.00 |

## NOTES:

MINIMUM RATING FACTORS ARE BASED ON THE STRENGTH I AND SERVICE III LIMIT STATES.

ALLOWABLE STRESSES FOR SERVICE III LIMIT STATE ARE AS REQUIRED FOR DESIGN.

## COMMENTS:

1.
2.
3.
4.

(#) CONTROLLING LOAD RATING

(1) DESIGN LOAD RATING (HL-93)

(2) DESIGN LOAD RATING (HS-20)

(3) LEGAL LOAD RATING **

** SEE CHART FOR VEHICLE TYPE

### GIRDER LOCATION

I - INTERIOR GIRDER
EL - EXTERIOR LEFT GIRDER
ER - EXTERIOR RIGHT GIRDER

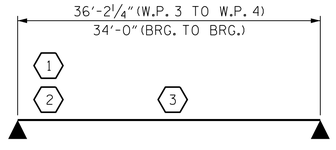


## LRFR SUMMARY

FOR SPAN C

PROJECT NO. 17BP.8.R.70

RANDOLPH COUNTY

STATION: 13+72.50 -L-

NORTH CAROLINA PROFESSIONAL ENGINEER SEAL 24939 BYRON E. ATKINSON
7/26/2017

**DOCUMENT NOT CONSIDERED FINAL UNLESS ALL SIGNATURES COMPLETED**


MI ENGINEERING
1011 SCHAUB DRIVE, SUITE 100
RALEIGH, NC 27606
(919) 851-6606
FIRM PE NUMBER : P-0671


STATE OF NORTH CAROLINA
DEPARTMENT OF TRANSPORTATION
RALEIGH

STANDARD
LRFR SUMMARY FOR 35' CORED SLAB UNIT 90° SKEW
(NON-INTERSTATE TRAFFIC)

| REVISIONS | | | | | | SHEET NO. |
|---|---|---|---|---|---|---|
| NO. | BY: | DATE: | NO. | BY: | DATE: | S-6 |
| 1 | | | 3 | | | TOTAL SHEETS |
| 2 | | | 4 | | | 26 |

| | | |
|---|---|---|
| ASSEMBLED BY: | B.E. LANNING | DATE: 07/17 |
| CHECKED BY : | B.E. ATKINSON | DATE: 07/17 |
| DESIGN ENGINEER OF RECORD: | B.E. ATKINSON | DATE: 07/17 |
| DRAWN BY : CVC 6/10 | | |
| CHECKED BY : DNS 6/10 | | |

STD. NO. 21LRFR1_90S_35L


7/26/2017
3:05:42 PM
User: blanning
Filename: P:\NC Bridges\2013 Archive\MI3010 - Div 08 Bridge Replacements_CH Engr\MI3010.04_Randolph 212\17BP8R70\Structures\401_011_17BP8R70_SD_LRFR3.dgn

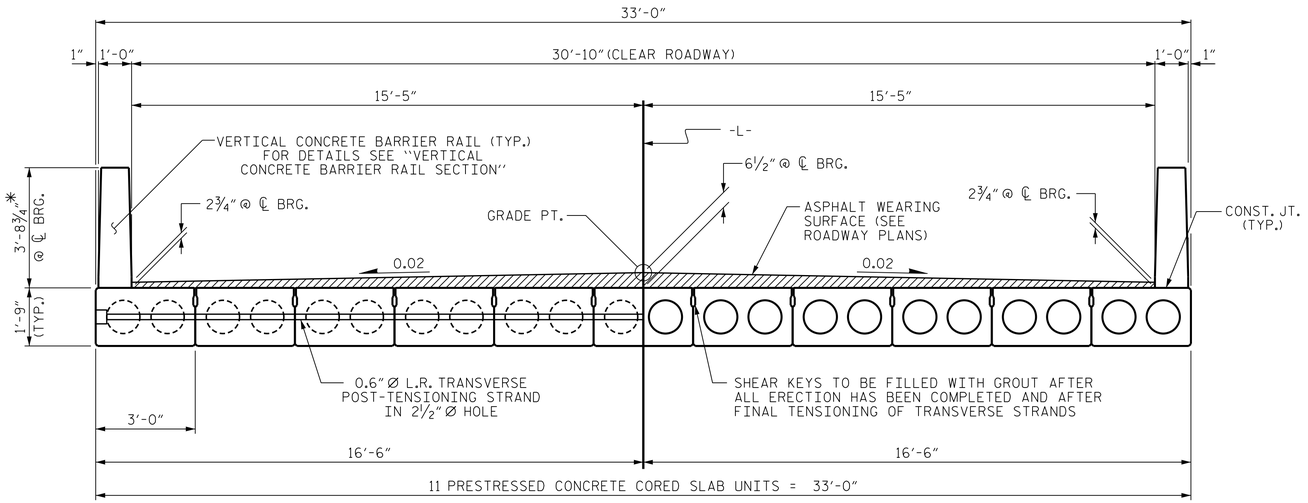


HALF SECTION
AT INTERMEDIATE DIAPHRAGMS

HALF SECTION
THROUGH VOIDS

## TYPICAL SECTION

* - THE MAXIMUM BARRIER RAIL HEIGHT AND ASPHALT THICKNESS IS SHOWN. THE HEIGHT OF THE BARRIER RAIL AND ASPHALT THICKNESS VARIES WHILE THE TOP OF THE BARRIER RAIL FOLLOWS THE PROFILE OF THE GUTTERLINE. FOR RAIL HEIGHT DETAILS AND ASPHALT THICKNESS SEE THE ''VERTICAL CONCRETE BARRIER RAIL SECTION'' DETAIL.

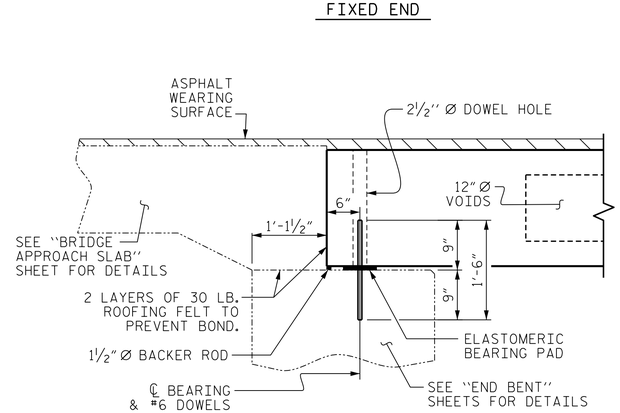


## SECTION AT END BENT

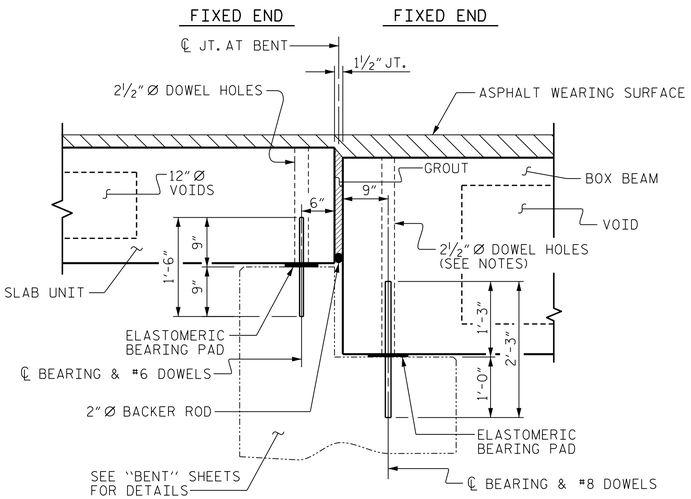


## SECTION AT BENT

(BENT 1 SHOWN, BENT 2 SIMILAR)

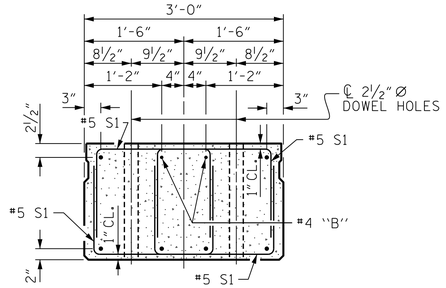


## END ELEVATION

SHOWING PLACEMENT OF DOUBLE STIRRUPS AND LOCATION OF DOWEL HOLES. (STRAND LAYOUT NOT SHOWN.) INTERIOR SLAB UNIT SHOWN-EXTERIOR SLAB UNIT SIMILAR EXCEPT SHEAR KEY LOCATION.

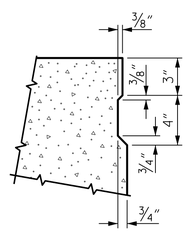


## SHEAR KEY DETAIL

NOTE: OMIT SHEAR KEY ON OUTSIDE FACE OF EXTERIOR CORED SLABS.

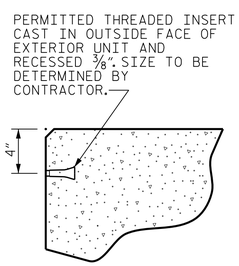


THREADED INSERT DETAIL

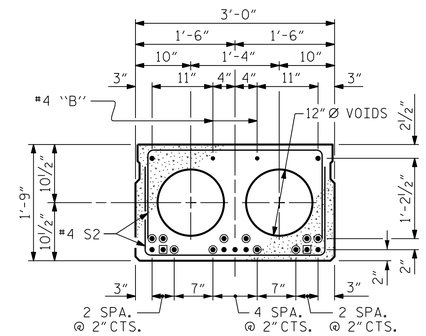


## INTERIOR SLAB SECTION (30′ & 35′ UNIT)

(9 STRANDS REQUIRED)

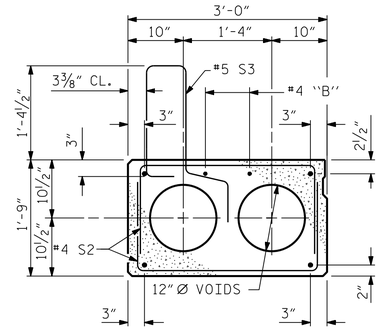


## EXT. SLAB SECTION

(FOR PRESTRESSED STRAND LAYOUT, SEE INTERIOR SLAB SECTION.)

## 0.6'' Ø LOW RELAXATION STRAND LAYOUT

◉ BOND SHALL BE BROKEN ON THESE STRANDS FOR A DISTANCE OF 2′-0″ FROM END OF CORED SLAB UNIT. SEE STANDARD SPECIFICATIONS, ARTICLE 1078-7.

◉ OPTIONAL FULL LENGTH DEBONDED STRANDS. THESE STRANDS ARE NOT REQUIRED. IF THE FABRICATOR CHOOSES TO INCLUDE THESE STRANDS IN THE CORED SLAB UNIT, THE STRANDS SHALL BE DEBONDED FOR THE FULL LENGTH OF THE UNIT AT NO ADDITIONAL COST. SEE STANDARD SPECIFICATIONS, ARTICLE 1078-7.

## DEBONDING LEGEND

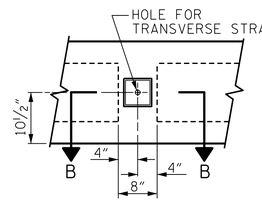


ELEVATION VIEW

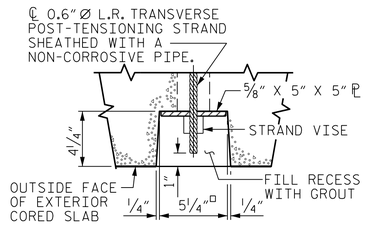


SECTION B-B

## GROUTED RECESS AT END OF POST-TENSIONED STRAND OF CORED SLABS

PROJECT NO. 17BP.8.R.70

RANDOLPH COUNTY

STATION: 13+72.50 -L-

SHEET 1 OF 4

STATE OF NORTH CAROLINA
DEPARTMENT OF TRANSPORTATION
RALEIGH

# STANDARD 3′-0'' X 1′-9'' PRESTRESSED CONCRETE CORED SLAB UNIT 90° SKEW SPAN A & SPAN C

NORTH CAROLINA PROFESSIONAL SEAL 24939 ENGINEER BYRON E. ATKINSON
7/26/2017

DOCUMENT NOT CONSIDERED FINAL UNLESS ALL SIGNATURES COMPLETED

MI ENGINEERING
1011 SCHAUB DRIVE, SUITE 100
RALEIGH, NC 27606
(919) 851-6606
FIRM PE NUMBER : P-0671

| REVISIONS | | | | | | SHEET NO. |
|---|---|---|---|---|---|---|
| NO. | BY: | DATE: | NO. | BY: | DATE: | S-7 |
| 1 | | | 3 | | | TOTAL SHEETS |
| 2 | | | 4 | | | 26 |

| | | | |
|---|---|---|---|
| ASSEMBLED BY: | B.E. LANNING | DATE: | 07/17 |
| CHECKED BY : | B.E. ATKINSON | DATE: | 07/17 |
| DESIGN ENGINEER OF RECORD: | B.E. ATKINSON | DATE: | 07/17 |
| DRAWN BY : | DGE 5/09 | REV. 9/14 | MAA/TMG |
| CHECKED BY : | BCH 6/09 | | |

STD. NO. 21''PCS2_33_90S

7/26/2017
3:05:44 PM
User: blanning
Filename: P:\NC Bridges\2013 Archive\MI3010 - Div 08 Bridge Replacements_CH Engr\MI3010_04_Randolph 212\17BP8R70\Structures\401_013_17BP8R70_SD_CSUI.dgn

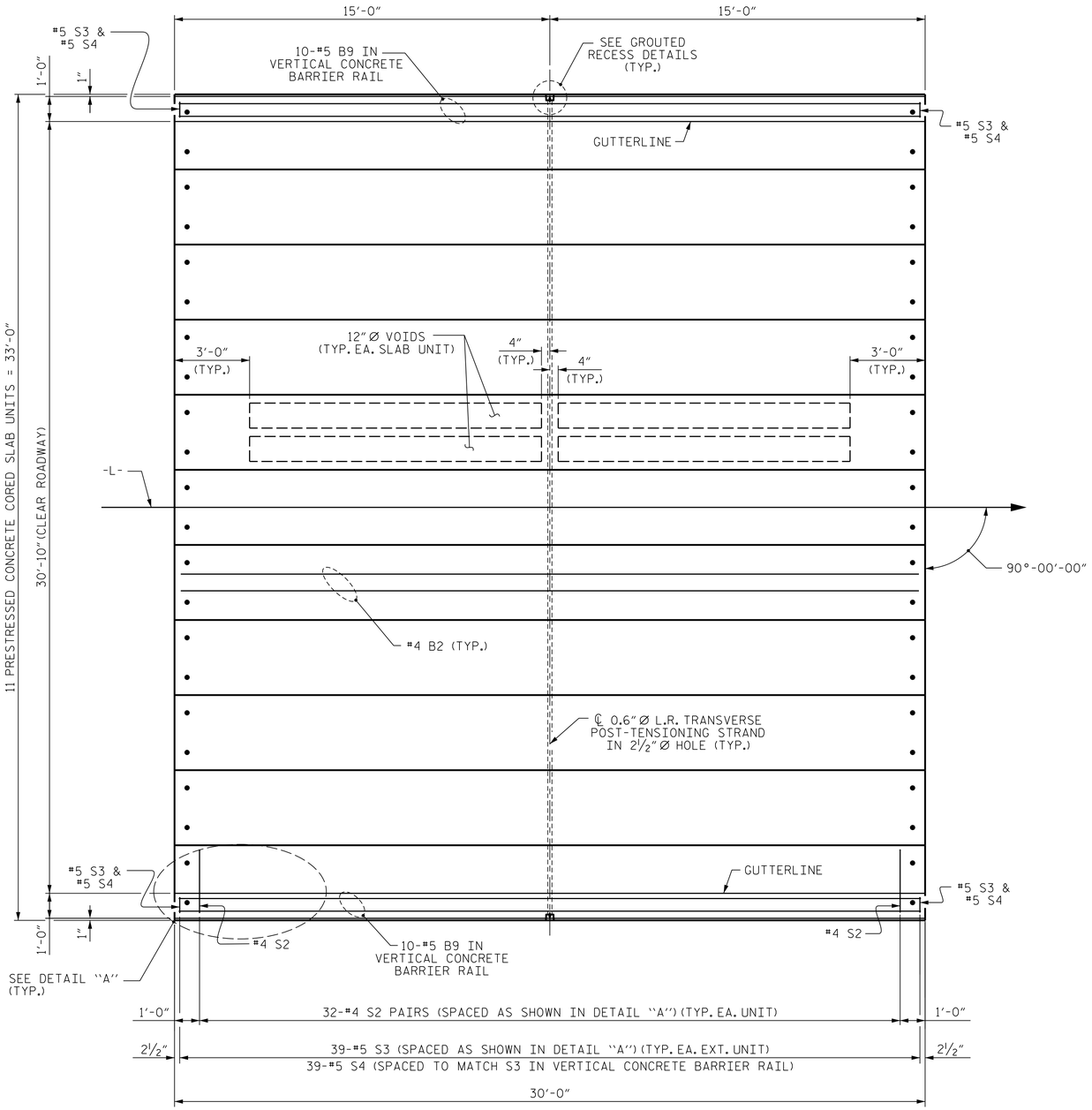


## PLAN OF UNIT - SPAN A

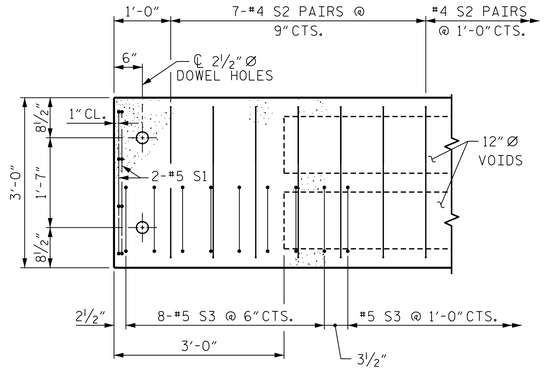


## DETAIL "A"

NOTE: EXTERIOR UNIT SHOWN - INTERIOR UNIT SIMILAR EXCEPT OMIT #5 S3 BARS.

PROJECT NO. 17BP.8.R.70
RANDOLPH COUNTY
STATION: 13+72.50 -L-

SHEET 2 OF 4

STATE OF NORTH CAROLINA
DEPARTMENT OF TRANSPORTATION
RALEIGH
STANDARD
PLAN OF 30' UNIT
30'-10" CLEAR ROADWAY
90° SKEW
SPAN A

NORTH CAROLINA PROFESSIONAL SEAL 24939 ENGINEER BYRON E. ATKINSON
7/26/2017

**DOCUMENT NOT CONSIDERED FINAL UNLESS ALL SIGNATURES COMPLETED**

MI ENGINEERING
1011 SCHAUB DRIVE, SUITE 100
RALEIGH, NC 27606
(919) 851-6606
FIRM PE NUMBER : P-0671

| REVISIONS | | | | | |
|---|---|---|---|---|---|
| NO. | BY: | DATE: | NO. | BY: | DATE: |
| 1 | | | 3 | | |
| 2 | | | 4 | | |

SHEET NO. S-8
TOTAL SHEETS 26

| | | | |
|---|---|---|---|
| ASSEMBLED BY: | B.E. LANNING | DATE: | 07/17 |
| CHECKED BY : | B.E. ATKINSON | DATE: | 07/17 |
| DESIGN ENGINEER OF RECORD: | B.E. ATKINSON | DATE: | 07/17 |
| DRAWN BY : DGE 3/09 | REV. 12/5/11 | MAA/AAC | |
| CHECKED BY : BCH 3/09 | REV. 8/14 | MAA/TMG | |

STD. NO. 21"PCS_33_90S_30L

7/26/2017
3:05:46 PM
User: blanning
Filename: P:\NC Bridges\2013 Archive\WI3010 - Div 08 Bridge Replacements_CH Engr-WI3010.04_Randolph 212\17BP8R70\Structures\401_015_17BP8R70_SD_CSU2.dgn

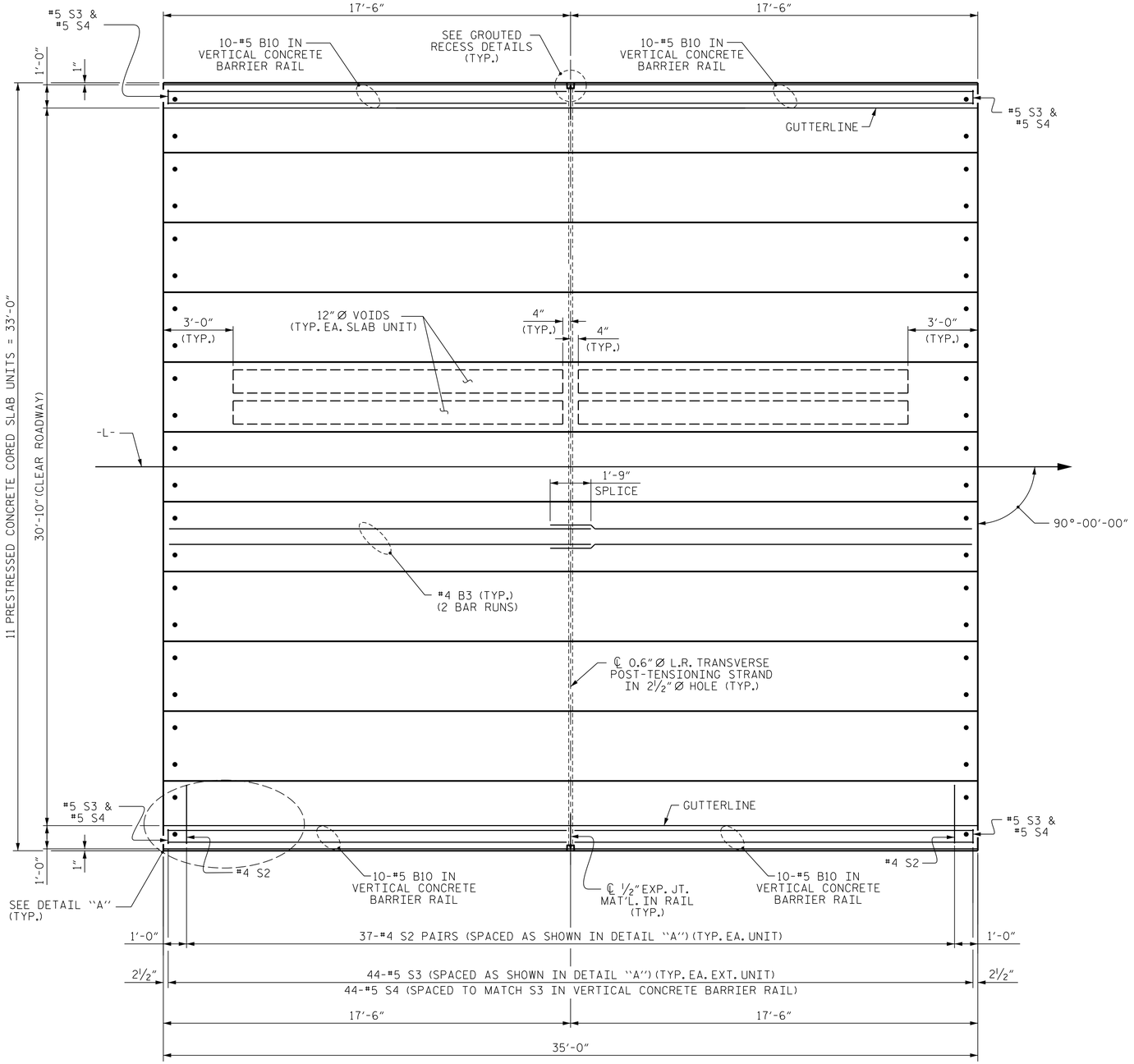


## PLAN OF UNIT - SPAN C

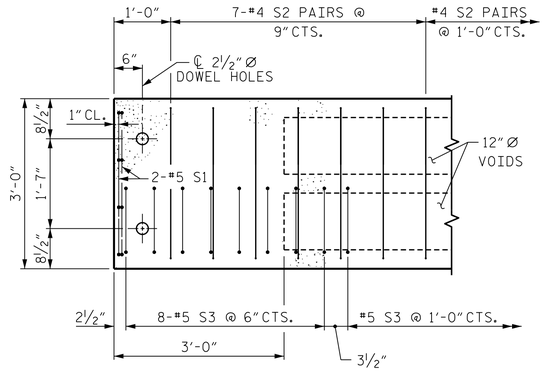


## DETAIL "A"

NOTE: EXTERIOR UNIT SHOWN - INTERIOR UNIT SIMILAR EXCEPT OMIT #5 S3 BARS.

PROJECT NO. 17BP.8.R.70

RANDOLPH COUNTY

STATION: 13+72.50 -L-

SHEET 3 OF 4

STATE OF NORTH CAROLINA
DEPARTMENT OF TRANSPORTATION
RALEIGH

STANDARD
PLAN OF 35' UNIT
30'-10" CLEAR ROADWAY
90° SKEW
SPAN C

NORTH CAROLINA PROFESSIONAL ENGINEER SEAL 24939 BYRON E. ATKINSON
7/26/2017

**DOCUMENT NOT CONSIDERED FINAL UNLESS ALL SIGNATURES COMPLETED**

MI ENGINEERING
1011 SCHAUB DRIVE, SUITE 100
RALEIGH, NC 27606
(919) 851-6606
FIRM PE NUMBER : P-0671

| REVISIONS | | | | | | SHEET NO. |
|---|---|---|---|---|---|---|
| NO. | BY: | DATE: | NO. | BY: | DATE: | S-9 |
| 1 | | | 3 | | | TOTAL SHEETS |
| 2 | | | 4 | | | 26 |

| | | | |
|---|---|---|---|
| ASSEMBLED BY: | B.E. LANNING | DATE: | 07/17 |
| CHECKED BY : | B.E. ATKINSON | DATE: | 07/17 |
| DESIGN ENGINEER OF RECORD: | B.E. ATKINSON | DATE: | 07/17 |
| DRAWN BY : DGE | 3/09 | REV. 12/5/11 | MAA/AAC |
| CHECKED BY : BCH | 3/09 | REV. 8/14 | MAA/TMG |

STD. NO. 21"PCS_33_90S_35L

7/26/2017
3:05:48 PM
User: blanning
Filename: P:\NC Bridges\2013 Archive\WI3010 - Div 08 Bridge Replacements_CH Engr\WI3010.04_Randolph 212\17BP8R70\Structures\401_017_17BP8R70_SD_CSU3.dgn

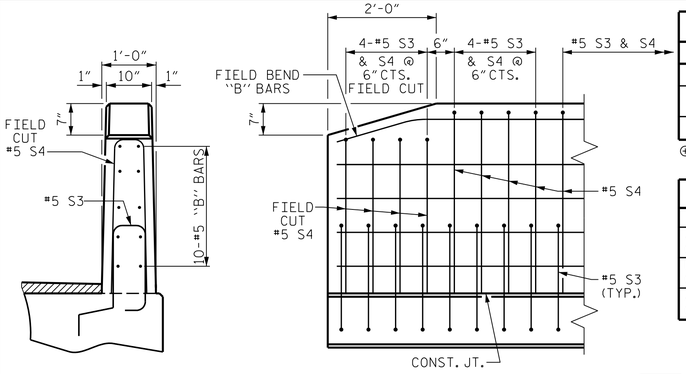


END VIEW SIDE VIEW

## END OF RAIL DETAILS

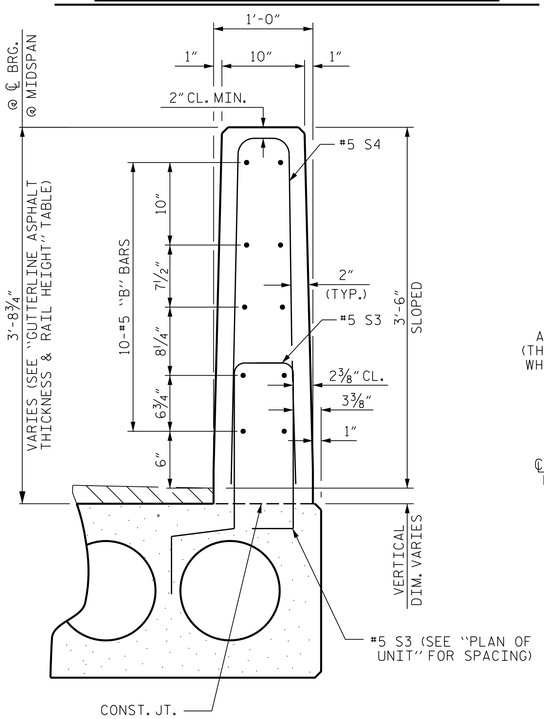


VERTICAL CONCRETE BARRIER RAIL SECTION

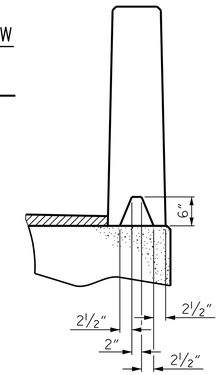


SECTION S-S
AT DAM IN OPEN JOINT
(THIS IS TO BE USED ONLY WHEN SLIP FORM IS USED)

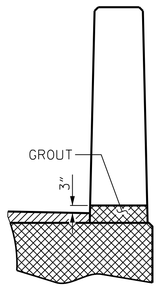


SECTION T-T
AT OPEN JOINT AT BENT
(THIS IS TO BE USED WHERE FOAM JOINT IS NOT USED)

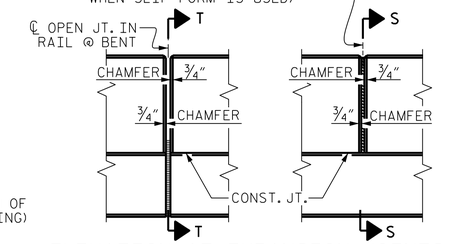


ELEVATION AT EXPANSION JOINTS

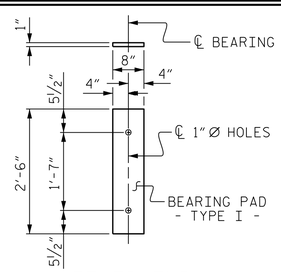


FIXED END
( TYPE I - 44 REQ'D. )

## ELASTOMERIC BEARING DETAILS

ELASTOMER IN ALL BEARINGS SHALL BE 60 DUROMETER HARDNESS.

| GUTTERLINE ASPHALT THICKNESS & RAIL HEIGHT | | |
|---|---|---|
| 30'-10" CLEAR ROADWAY | ASPHALT OVERLAY THICKNESS | RAIL HEIGHT |
| | @ MID-SPAN | @ MID-SPAN |
| | NORMAL CROWN SECTION | |
| 30' & 35' UNITS | ⊕ 2¼" | 3'-8⅝" |

⊕ INCLUDES IMPACT OF SAG VERTICAL CURVE ALONG GRADE LINE -L-.

| GRADE 270 STRANDS | 0.6" Ø L.R. |
|---|---|
| AREA ( SQUARE INCHES ) | 0.217 |
| ULTIMATE STRENGTH ( LBS. PER STRAND ) | 58,600 |
| APPLIED PRESTRESS ( LBS. PER STRAND ) | 43,950 |

| CORED SLABS REQUIRED | NUMBER | LENGTH | TOTAL LENGTH |
|---|---|---|---|
| 30' UNIT | | | |
| EXTERIOR C.S. | 2 | 30'-0" | 60'-0" |
| INTERIOR C.S. | 9 | 30'-0" | 270'-0" |
| TOTAL | 11 | | 330'-0" |

| CORED SLABS REQUIRED | NUMBER | LENGTH | TOTAL LENGTH |
|---|---|---|---|
| 35' UNIT | | | |
| EXTERIOR C.S. | 2 | 35'-0" | 70'-0" |
| INTERIOR C.S. | 9 | 35'-0" | 315'-0" |
| TOTAL | 11 | | 385'-0" |

## BAR TYPES

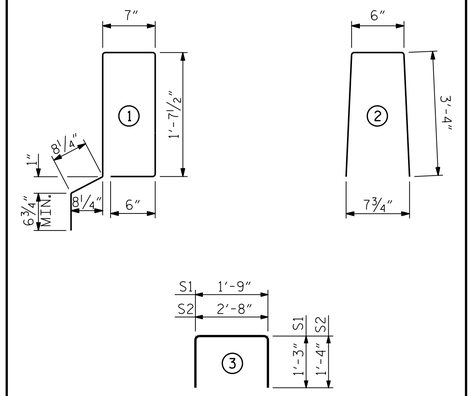


ALL BAR DIMENSIONS ARE OUT TO OUT.

## NOTES

ALL PRESTRESSING STRANDS SHALL BE 7-WIRE LOW RELAXATION GRADE 270 STRANDS AND SHALL CONFORM TO AASHTO M203 EXCEPT FOR SAMPLING REQUIREMENTS WHICH SHALL BE IN ACCORDANCE WITH THE STANDARD SPECIFICATIONS.

ALL REINFORCING STEEL CAST WITH THE CORED SLAB SECTIONS SHALL BE GRADE 60 AND SHALL BE INCLUDED IN THE UNIT PRICE BID FOR PRESTRESSED CONCRETE CORED SLABS.

RECESSES FOR TRANSVERSE STRANDS SHALL BE GROUTED AFTER THE TENSIONING OF THE STRANDS.

THE 2½" Ø DOWEL HOLES AT FIXED ENDS OF SLAB SECTIONS SHALL BE FILLED WITH NON-SHRINK GROUT.

THE BACKER RODS SHALL CONFORM TO THE REQUIREMENTS OF TYPE M BOND BREAKER. SEE SECTION 1028 OF THE STANDARD SPECIFICATIONS.

WHEN CORED SLABS ARE CAST, AN INTERNAL HOLD-DOWN SYSTEM SHALL BE EMPLOYED TO PREVENT VOIDS FROM RISING OR MOVING SIDEWAYS. AT LEAST SIX WEEKS PRIOR TO CASTING CORED SLABS, THE CONTRACTOR SHALL SUBMIT TO THE ENGINEER FOR REVIEW AND COMMENT, DETAILED DRAWINGS OF THE PROPOSED HOLD-DOWN SYSTEM. IN ADDITION TO STRUCTURAL DETAILS, LOCATION AND SPACING OF THE HOLD-DOWNS SHALL BE INDICATED.

ALL REINFORCING STEEL IN THE VERTICAL CONCRETE BARRIER RAIL SHALL BE EPOXY COATED.

PRESTRESSING STRANDS SHALL BE CUT FLUSH WITH THE CORED SLAB UNIT ENDS.

APPLY EPOXY PROTECTIVE COATING TO CORED SLAB UNIT ENDS.

GROOVED CONTRACTION JOINTS, ½" IN DEPTH, SHALL BE TOOLED IN ALL EXPOSED FACES OF THE BARRIER RAIL AND IN ACCORDANCE WITH ARTICLE 825-10(B) OF THE STANDARD SPECIFICATIONS. A CONTRACTION JOINT SHALL BE LOCATED AT EACH THIRD POINT BETWEEN BARRIER RAIL EXPANSION JOINTS. ONLY ONE CONTRACTION JOINT IS REQUIRED AT MIDPOINT OF BARRIER RAIL SEGMENTS LESS THAN 20 FEET IN LENGTH AND NO CONTRACTION JOINTS ARE REQUIRED FOR THOSE SEGMENTS LESS THAN 10 FEET IN LENGTH.

FLAME CUTTING OF THE TRANSVERSE POST-TENSIONING STRAND IS NOT ALLOWED.

THE TRANSFER OF LOAD FROM THE ANCHORAGES TO THE CORED SLAB UNIT SHALL BE DONE WHEN THE CONCRETE HAS REACHED A COMPRESSIVE STRENGTH OF NOT LESS THAN THE REQUIRED STRENGTH SHOWN IN THE "CONCRETE RELEASE STRENGTH" TABLE.

FOR GROUT FOR STRUCTURES, SEE SPECIAL PROVISIONS.

THE PERMITTED THREADED INSERTS ARE DETAILED AS AN OPTION FOR THE CONTRACTOR TO ATTACH FALSEWORK AND FORMWORK DURING CONSTRUCTION.

THE PERMITTED THREADED INSERTS IN THE EXTERIOR UNITS SHALL BE SIZED BY THE CONTRACTOR, SPACED AT 4'-0" CENTERS AND GALVANIZED IN ACCORDANCE WITH SECTION 1076 OF THE STANDARD SPECIFICATIONS. STAINLESS STEEL THREADED INSERTS MAY BE USED AS AN ALTERNATE.

THE PERMITTED THREADED INSERTS SHALL BE GROUTED BY THE CONTRACTOR IMMEDIATELY FOLLOWING REMOVAL OF THE FALSEWORK.

THE COST OF THE PERMITTED THREADED INSERTS SHALL BE INCLUDED IN THE PRICE BID FOR THE PRECAST UNITS.

| BILL OF MATERIAL FOR VERTICAL CONCRETE BARRIER RAIL | | | | | | |
|---|---|---|---|---|---|---|
| BAR | BARS PER PAIR OF EXTERIOR UNITS | TOTAL NO. | SIZE | TYPE | LENGTH | WEIGHT |
| | 30' UNIT | | | | | |
| * B9 | 20 | 20 | #5 | STR | 29'-7" | 617 |
| * S4 | 78 | 78 | #5 | 2 | 7'-2" | 583 |
| * EPOXY COATED REINFORCING STEEL | | | | LBS. | | 1200 |
| CLASS AA CONCRETE | | | | CU.YDS. | | 7.7 |
| TOTAL VERTICAL CONCRETE BARRIER RAIL | | | | LN. FT. | | 60.25 |

| BILL OF MATERIAL FOR VERTICAL CONCRETE BARRIER RAIL | | | | | | |
|---|---|---|---|---|---|---|
| BAR | BARS PER PAIR OF EXTERIOR UNITS | TOTAL NO. | SIZE | TYPE | LENGTH | WEIGHT |
| | 35' UNIT | | | | | |
| * B10 | 40 | 40 | #5 | STR | 17'-1" | 713 |
| * S4 | 88 | 88 | #5 | 2 | 7'-2" | 658 |
| * EPOXY COATED REINFORCING STEEL | | | | LBS. | | 1371 |
| CLASS AA CONCRETE | | | | CU.YDS. | | 9.0 |
| TOTAL VERTICAL CONCRETE BARRIER RAIL | | | | LN. FT. | | 70.25 |

| BILL OF MATERIAL FOR ONE 30' CORED SLAB UNIT | | | | EXTERIOR UNIT | | INTERIOR UNIT | |
|---|---|---|---|---|---|---|---|
| BAR | NUMBER | SIZE | TYPE | LENGTH | WEIGHT | LENGTH | WEIGHT |
| B2 | 2 | #4 | STR | 29'-8" | 40 | 29'-8" | 40 |
| S1 | 8 | #5 | 3 | 4'-3" | 35 | 4'-3" | 35 |
| S2 | 64 | #4 | 3 | 5'-4" | 228 | 5'-4" | 228 |
| * S3 | 39 | #5 | 1 | 5'-7" | 227 | | |
| REINFORCING STEEL | | | LBS. | | 303 | | 303 |
| * EPOXY COATED REINFORCING STEEL | | | LBS. | | 227 | | |
| 5000 P.S.I. CONCRETE | | | CU. YDS. | | 4.4 | | 4.4 |
| 0.6" Ø L.R. STRANDS | | | No. | | 9 | | 9 |

| BILL OF MATERIAL FOR ONE 35' CORED SLAB UNIT | | | | EXTERIOR UNIT | | INTERIOR UNIT | |
|---|---|---|---|---|---|---|---|
| BAR | NUMBER | SIZE | TYPE | LENGTH | WEIGHT | LENGTH | WEIGHT |
| B3 | 4 | #4 | STR | 18'-3" | 49 | 18'-3" | 49 |
| S1 | 8 | #5 | 3 | 4'-3" | 35 | 4'-3" | 35 |
| S2 | 74 | #4 | 3 | 5'-4" | 264 | 5'-4" | 264 |
| * S3 | 44 | #5 | 1 | 5'-7" | 256 | | |
| REINFORCING STEEL | | | LBS. | | 348 | | 348 |
| * EPOXY COATED REINFORCING STEEL | | | LBS. | | 256 | | |
| 5000 P.S.I. CONCRETE | | | CU. YDS. | | 5.1 | | 5.1 |
| 0.6" Ø L.R. STRANDS | | | No. | | 9 | | 9 |

| DEAD LOAD DEFLECTION AND CAMBER | |
|---|---|
| | 3'-0" x 1'-9" |
| 30' & 35' CORED SLAB UNIT | 0.6" Ø L.R. STRAND |
| CAMBER ( SLAB ALONE IN PLACE ) | ¼" ↑ |
| DEFLECTION DUE TO SUPERIMPOSED DEAD LOAD** | ⅛" ↓ |
| FINAL CAMBER | ⅛" ↑ |

** INCLUDES FUTURE WEARING SURFACE

| CONCRETE RELEASE STRENGTH | |
|---|---|
| UNIT | PSI |
| 30' & 35' UNITS | 4000 |

PROJECT NO. 17BP.8.R.70
RANDOLPH COUNTY
STATION: 13+72.50 -L-

SHEET 4 OF 4

NORTH CAROLINA PROFESSIONAL SEAL 24939 ENGINEER BYRON E. ATKINSON
7/26/2017

DOCUMENT NOT CONSIDERED FINAL UNLESS ALL SIGNATURES COMPLETED

MI ENGINEERING
1011 SCHAUB DRIVE, SUITE 100
RALEIGH, NC 27606
(919) 851-6606
FIRM PE NUMBER : P-0671

STATE OF NORTH CAROLINA
DEPARTMENT OF TRANSPORTATION
RALEIGH

STANDARD
3'-0" X 1'-9"
PRESTRESSED CONCRETE
CORED SLAB UNIT
90° SKEW
SPAN A & SPAN C

| REVISIONS | | | | | | SHEET NO. |
|---|---|---|---|---|---|---|
| NO. | BY: | DATE: | NO. | BY: | DATE: | S-10 |
| 1 | | | 3 | | | TOTAL SHEETS |
| 2 | | | 4 | | | 26 |

STD. NO. 21" PCS3_33_90S

| | | |
|---|---|---|
| ASSEMBLED BY: | B.E. LANNING | DATE: 07/17 |
| CHECKED BY : | B.E. ATKINSON | DATE: 07/17 |
| DESIGN ENGINEER OF RECORD: | B.E. ATKINSON | DATE: 07/17 |
| DRAWN BY : DGE 5/09 | REV. 11/14 | MAA/TMG |
| CHECKED BY : BCH 6/09 | | |

7/26/2017
3:05:50 PM
User: blanning
Filename: P:\NC Bridges\2013 Archive\MI3010 - Div 08 Bridge Replacements_CH Engr\MI3010_04_Randolph 212\17BP8R70\Structures\401_019_17BP8R70_SD_CSU4.dgn

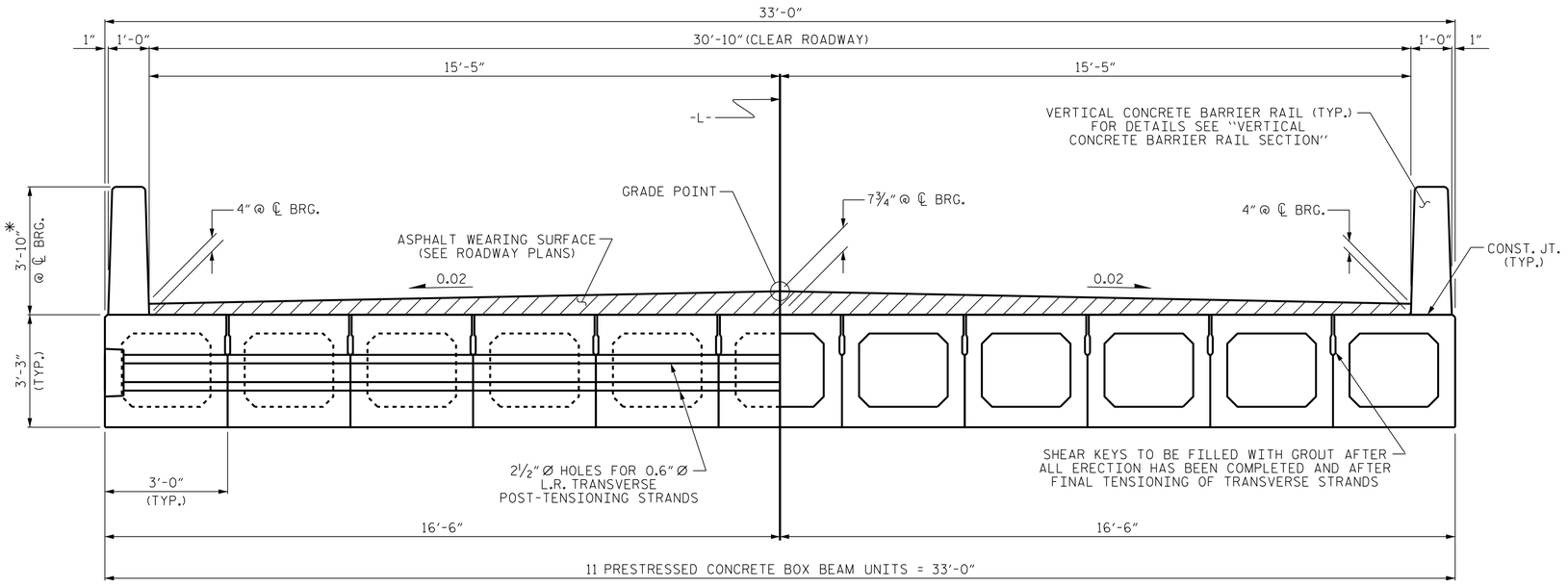


HALF SECTION
AT INTERMEDIATE DIAPHRAGMS

HALF SECTION
THROUGH VOIDS

## TYPICAL SECTION

*THE MAXIMUM BARRIER RAIL HEIGHT AND ASPHALT THICKNESS IS SHOWN. THE HEIGHT OF THE BARRIER RAIL AND ASPHALT THICKNESS VARIES WHILE THE TOP OF THE BARRIER RAIL FOLLOWS THE PROFILE OF THE GUTTERLINE. FOR RAIL HEIGHT DETAILS AND ASPHALT THICKNESS, SEE THE ''VERTICAL CONCRETE BARRIER RAIL SECTION'' DETAIL.

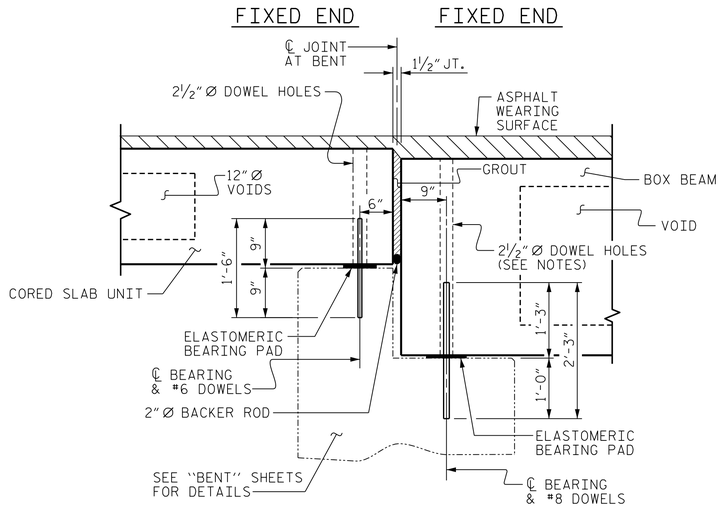


## SECTION AT BENT 1

BENT 2 SIMILAR

## NOTES

ALL PRESTRESSING STRANDS SHALL BE 7-WIRE LOW RELAXATION GRADE 270 STRANDS AND SHALL CONFORM TO AASHTO M203 EXCEPT FOR SAMPLING REQUIREMENTS WHICH SHALL BE IN ACCORDANCE WITH THE STANDARD SPECIFICATIONS.

ALL REINFORCING STEEL CAST WITH THE BOX BEAM SECTIONS SHALL BE GRADE 60 AND SHALL BE INCLUDED IN THE UNIT PRICE BID FOR PRESTRESSED CONCRETE BOX BEAMS.

FLAME CUTTING OF THE TRANSVERSE POST-TENSIONING STRAND IS NOT ALLOWED.

RECESSES FOR TRANSVERSE STRANDS SHALL BE GROUTED AFTER THE TENSIONING OF THE STRANDS.

THE 2½″ Ø DOWEL HOLES AT FIXED ENDS OF BOX BEAM SECTIONS SHALL BE FILLED WITH NON-SHRINK GROUT.

THE BACKER RODS SHALL CONFORM TO THE REQUIREMENTS OF TYPE M BOND BREAKER. SEE SECTION 1028 OF THE STANDARD SPECIFICATIONS.

THE TRANSFER OF LOAD FROM THE ANCHORAGES TO THE BOX BEAM UNIT SHALL BE DONE WHEN THE CONCRETE HAS REACHED A COMPRESSIVE STRENGTH OF NOT LESS THAN 5,500 PSI.

ALL REINFORCING STEEL IN VERTICAL CONCRETE BARRIER RAILS SHALL BE EPOXY COATED.

PRESTRESSING STRANDS SHALL BE CUT FLUSH WITH THE BOX BEAM UNIT ENDS.

APPLY EPOXY PROTECTIVE COATING TO BOX BEAM UNIT ENDS.

VERTICAL GROOVED CONTRACTION JOINTS, ½'' IN DEPTH, SHALL BE TOOLED IN ALL EXPOSED FACES OF THE BARRIER RAIL AND IN ACCORDANCE WITH ARTICLE 825-10(B) OF THE STANDARD SPECIFICATIONS. A VERTICAL CONTRACTION JOINT SHALL BE LOCATED AT EACH THIRD POINT BETWEEN BARRIER RAIL EXPANSION JOINTS. ONLY ONE CONTRACTION JOINT IS REQUIRED AT MIDPOINT OF BARRIER RAIL SEGMENTS LESS THAN 20 FEET IN LENGTH AND NO CONTRACTION JOINTS ARE REQUIRED FOR THOSE SEGMENTS LESS THAN 10 FEET IN LENGTH.

THE LOCATION OF THE VOID DRAINS MAY BE SHIFTED SLIGHTLY WHERE NECESSARY TO CLEAR PRESTRESSING STRANDS OR TRANSVERSE REINFORCING STEEL.

FOR GROUT FOR STRUCTURES, SEE SPECIAL PROVISIONS.

THE PERMITTED THREADED INSERTS ARE DETAILED AS AN OPTION FOR THE CONTRACTOR TO ATTACH FALSEWORK AND FORMWORK DURING CONSTRUCTION.

THE PERMITTED THREADED INSERTS IN THE EXTERIOR UNITS SHALL BE SIZED BY THE CONTRACTOR, SPACED AT 4′-0″ CENTERS AND GALVANIZED IN ACCORDANCE WITH SECTION 1076 OF THE STANDARD SPECIFICATIONS. STAINLESS STEEL THREADED INSERTS MAY BE USED AS AN ALTERNATE.

THE PERMITTED THREADED INSERTS SHALL BE GROUTED BY THE CONTRACTOR IMMEDIATELY FOLLOWING REMOVAL OF THE FALSEWORK.

THE COST OF THE PERMITTED THREADED INSERTS SHALL BE INCLUDED IN THE PRICE BID FOR THE PRECAST UNITS.

PROJECT NO. 17BP.8.R.70

RANDOLPH COUNTY

STATION: 13+72.50 -L-

SHEET 1 OF 5

NORTH CAROLINA PROFESSIONAL SEAL 24939 ENGINEER BYRON E. ATKINSON
7/26/2017

STATE OF NORTH CAROLINA
DEPARTMENT OF TRANSPORTATION
RALEIGH

STANDARD
3′-0″ X 3′-3″
PRESTRESSED CONCRETE
BOX BEAM UNIT
SPAN B

| REVISIONS | | | | | | SHEET NO. |
|---|---|---|---|---|---|---|
| NO. | BY: | DATE: | NO. | BY: | DATE: | S-11 |
| 1 | | | 3 | | | TOTAL SHEETS |
| 2 | | | 4 | | | 26 |

DOCUMENT NOT CONSIDERED FINAL UNLESS ALL SIGNATURES COMPLETED

MI ENGINEERING
1011 SCHAUB DRIVE, SUITE 100
RALEIGH, NC 27606
(919) 851-6606
FIRM PE NUMBER : P-0671

| | | |
|---|---|---|
| ASSEMBLED BY: | B.E. LANNING | DATE: 07/17 |
| CHECKED BY : | B.E. ATKINSON | DATE: 07/17 |
| DESIGN ENGINEER OF RECORD: | B.E. ATKINSON | DATE: 07/17 |
| DRAWN BY : DGE 8/11 | REV. 10/15 | MAA/TMG |
| CHECKED BY : TMG 11/11 | | |

STD. NO. 39PCBB1_33

7/26/2017 3:05:53 PM
User: blanning
Filename: P:\NC Bridges\2013 Archive\MI3010 - Div 08 Bridge Replacements.CH Engr\MI3010.04_Randolph 212\17BP8R70\Structures\401_021_17BP8R70_SD_BBUI.dgn

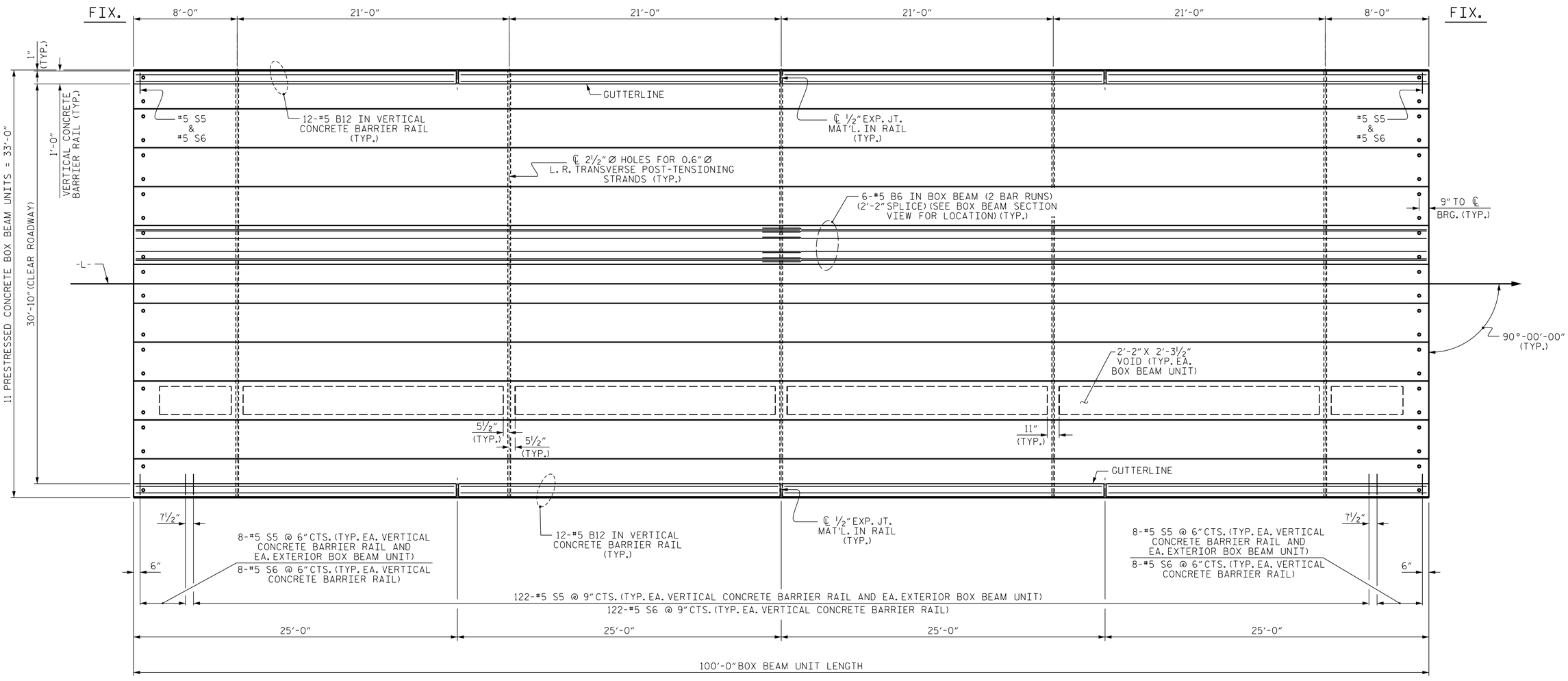


## PLAN OF UNIT

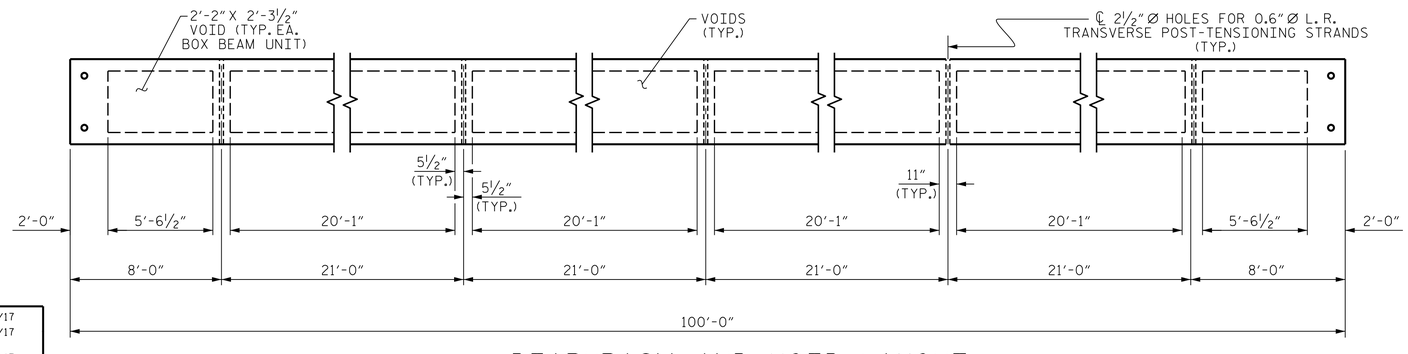


## DIAPHRAGM AND VOID LAYOUT

PROJECT NO. 17BP.8.R.70

RANDOLPH COUNTY

STATION: 13+72.50 -L-

SHEET 2 OF 5

STATE OF NORTH CAROLINA
DEPARTMENT OF TRANSPORTATION
RALEIGH

# PLAN OF 100' UNIT 30'-10'' CLEAR ROADWAY 90° SKEW SPAN B

NORTH CAROLINA PROFESSIONAL SEAL 24939 ENGINEER BYRON E. ATKINSON
7/26/2017

**DOCUMENT NOT CONSIDERED FINAL UNLESS ALL SIGNATURES COMPLETED**

MI ENGINEERING
1011 SCHAUB DRIVE, SUITE 100
RALEIGH, NC 27606
(919) 851-6606
FIRM PE NUMBER : P-0671

| REVISIONS | | | | | | SHEET NO. |
|---|---|---|---|---|---|---|
| NO. | BY: | DATE: | NO. | BY: | DATE: | S-12 |
| 1 | | | 3 | | | TOTAL SHEETS |
| 2 | | | 4 | | | 26 |

| | | |
|---|---|---|
| ASSEMBLED BY: | B.E. LANNING | DATE: 07/17 |
| CHECKED BY : | B.E. ATKINSON | DATE: 07/17 |
| DESIGN ENGINEER OF RECORD: | B.E. ATKINSON | DATE: 07/17 |
| DRAWN BY : DGE 8/10 | REV. 8/14 | MAA/TMG |
| CHECKED BY : TMG 11/11 | | |

7/26/2017 3:05:55 PM
User: blanning
Filename: P:\NC Bridges\2013 Archive\MI3010 - Div 08 Bridge Replacements_CH Engr\MI3010.04_Randolph 212\17BP8R70\Structures\401_023_17BP8R70_SD_BBU2.dgn

STD.NO.39PCBB_33_90S_100L

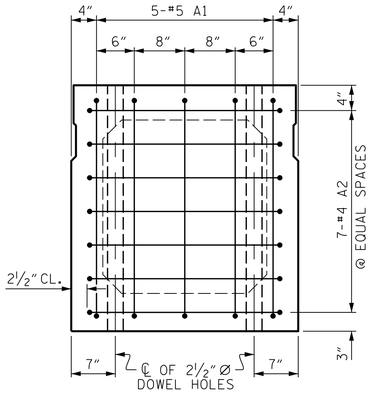


## END ELEVATION

SHOWING PLACEMENT OF #5 & #4 "A" BARS AND LOCATION OF DOWEL HOLES.
(INTERIOR BOX BEAM SECTION SHOWN-EXTERIOR SECTION SIMILAR EXCEPT SHEAR KEY LOCATION. STRAND LAYOUT NOT SHOWN.)

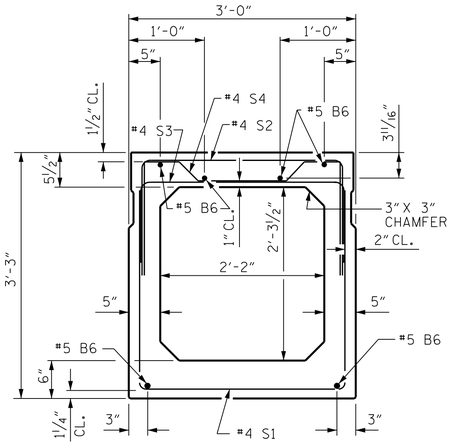


## INTERIOR BOX BEAM SECTION

( STRAND LAYOUT NOT SHOWN)

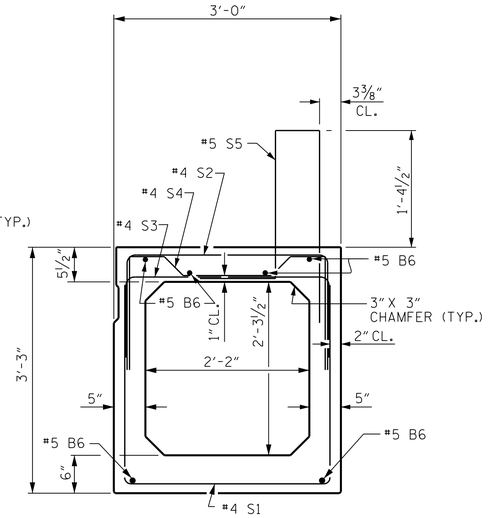


## EXTERIOR BOX BEAM SECTION

( STRAND LAYOUT NOT SHOWN)

## 0.6" Ø LOW RELAXATION STRAND LAYOUT

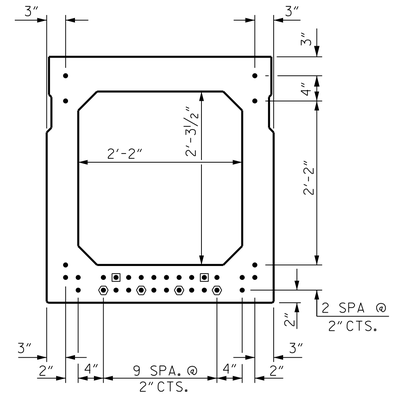


## TYPICAL STRAND LOCATION

(32 STRANDS REQUIRED)

## DEBONDING LEGEND

- ● FULLY BONDED STRANDS
- ◉ STRANDS DEBONDED FOR 4'-0" FROM END OF GIRDER
- ⬢ STRANDS DEBONDED FOR 12'-0" FROM END OF GIRDER

BOND SHALL BE BROKEN ON STRANDS AS SHOWN FOR THE SPECIFIED LENGTH FROM EACH END OF THE BOX BEAM. SEE STANDARD SPECIFICATIONS ARTICLE 1078-7.

## BAR TYPES

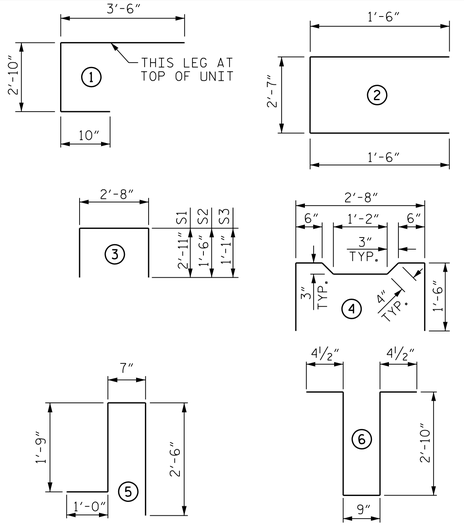


ALL BAR DIMENSIONS ARE OUT TO OUT.

## BILL OF MATERIAL FOR ONE BOX BEAM SECTION

| | | | | EXTERIOR UNIT | | INTERIOR UNIT | |
|---|---|---|---|---|---|---|---|
| BAR | NUMBER | SIZE | TYPE | LENGTH | WEIGHT | LENGTH | WEIGHT |
| A1 | 10 | #5 | 1 | 7'-2" | 75 | 7'-2" | 75 |
| A2 | 44 | #4 | 2 | 5'-7" | 164 | 5'-7" | 164 |
| B6 | 12 | #5 | STR | 50'-11" | 637 | 50'-11" | 637 |
| K1 | 15 | #4 | 6 | 7'-2" | 72 | 7'-2" | 72 |
| K2 | 10 | #4 | STR | 2'-7" | 17 | 2'-7" | 17 |
| S1 | 81 | #4 | 3 | 8'-6" | 460 | 8'-6" | 460 |
| S2 | 81 | #4 | 3 | 5'-8" | 307 | 5'-8" | 307 |
| S3 | 141 | #4 | 3 | 4'-10" | 455 | 4'-10" | 455 |
| S4 | 60 | #4 | 4 | 5'-10" | 234 | 5'-10" | 234 |
| ✳ S5 | 138 | #5 | 5 | 5'-10" | 840 | -- | -- |
| REINFORCING STEEL | | | | | 2421 LBS. | | 2421 LBS. |
| ✳ EPOXY COATED REINF. STEEL | | | | | 840 LBS. | | |
| 7500 P.S.I. CONCRETE | | | | | 19.6 CU. YDS. | | 19.4 CU. YDS. |
| 0.6" Ø L.R. STRANDS | | | | | No. 32 | | No. 32 |

## GRADE 270 STRANDS

| | 0.6" Ø L.R. |
|---|---|
| AREA ( SQUARE INCHES ) | 0.217 |
| ULTIMATE STRENGTH ( LBS. PER STRAND ) | 58,600 |
| APPLIED PRESTRESS ( LBS. PER STRAND ) | 43,950 |

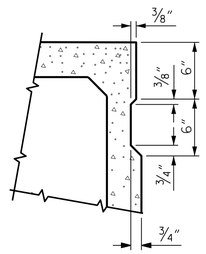


## SHEAR KEY DETAIL

NOTE: OMIT SHEAR KEY ON OUTSIDE FACE OF EXTERIOR BOX BEAMS.

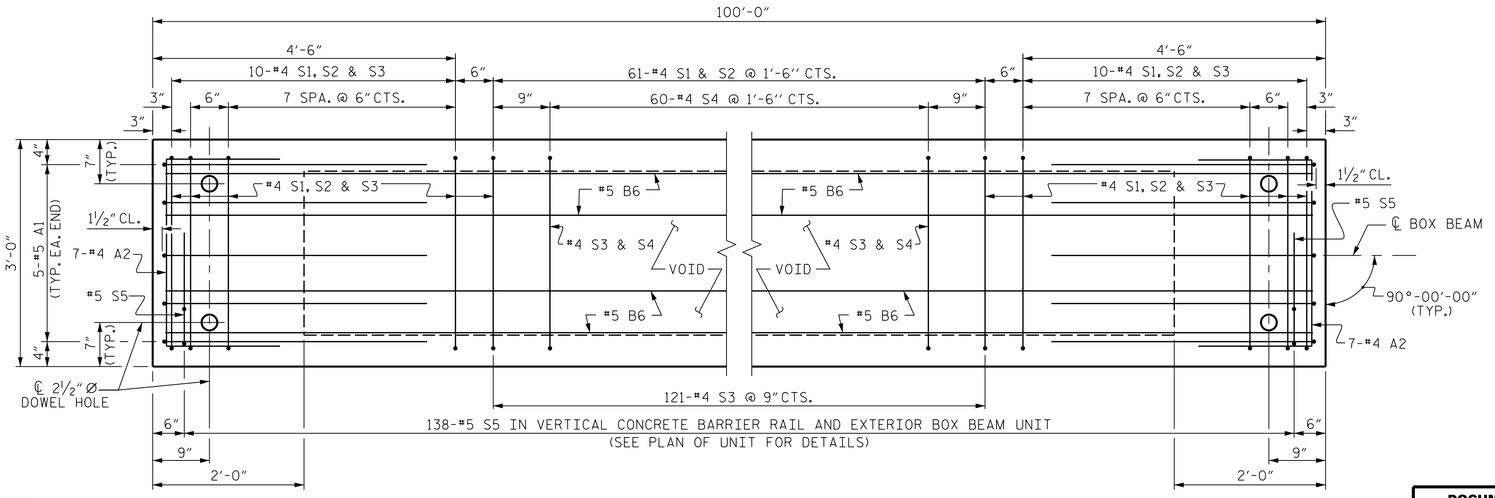


## PLAN OF BOX BEAM

EXTERIOR UNIT SHOWN, INTERIOR UNIT SIMILAR EXCEPT OMIT #5 S5 BARS.
FOR LOCATION OF DIAPHRAGMS, SEE PLAN OF UNIT.
FOR REINFORCING STEEL IN DIAPHRAGMS, SEE DIAPHRAGM DETAILS.

NORTH CAROLINA PROFESSIONAL SEAL 24939 ENGINEER BYRON E. ATKINSON
7/26/2017

**DOCUMENT NOT CONSIDERED FINAL UNLESS ALL SIGNATURES COMPLETED**

MI ENGINEERING
1011 SCHAUB DRIVE, SUITE 100
RALEIGH, NC 27606
(919) 851-6606
FIRM PE NUMBER : P-0671

PROJECT NO. 17BP.8.R.70
RANDOLPH COUNTY
STATION: 13+72.50 -L-

SHEET 3 OF 5

STATE OF NORTH CAROLINA
DEPARTMENT OF TRANSPORTATION
RALEIGH

# STANDARD 3'-0" X 3'-3" PRESTRESSED CONCRETE BOX BEAM UNIT SPAN B

| REVISIONS | | | | | | SHEET NO. |
|---|---|---|---|---|---|---|
| NO. | BY: | DATE: | NO. | BY: | DATE: | S-13 |
| 1 | | | 3 | | | TOTAL SHEETS |
| 2 | | | 4 | | | 26 |

STD. NO. 39PCBB6_90S_100L

| | | |
|---|---|---|
| ASSEMBLED BY: | B.E. LANNING | DATE: 07/17 |
| CHECKED BY : | B.E. ATKINSON | DATE: 07/17 |
| DESIGN ENGINEER OF RECORD: | B.E. ATKINSON | DATE: 07/17 |
| DRAWN BY : | DGE II/II | REV. 9/14 MAA/TMG |
| CHECKED BY : | TMG II/II | |

7/26/2017
3:05:57 PM
User: blanning
Filename: P:\NC Bridges\2013 Archive\MI3010 - Div 08 Bridge Replacements_CH Engr~\MI3010.04_Randolph 212\17BP8R70\Structures\401_025_17BP8R70_SD_BBU3.dgn

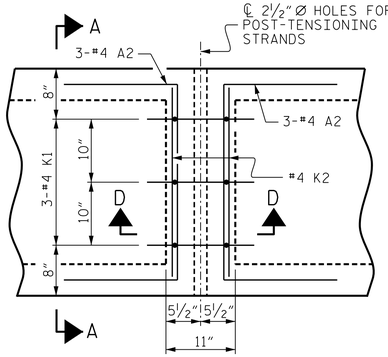


PLAN

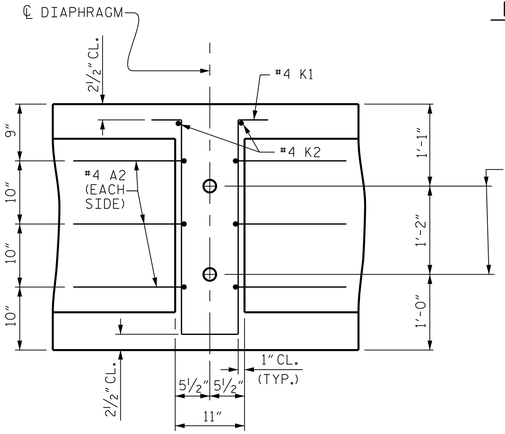


SECTION D-D

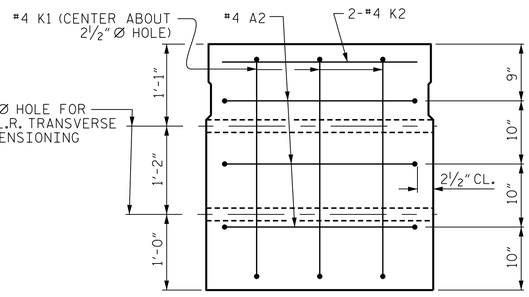


SECTION A-A

VOIDS NOT SHOWN

## DOUBLE DIAPHRAGM DETAILS

#4 "S" BARS NOT SHOWN. #4 "S" BARS MAY BE SHIFTED SLIGHTLY TO CLEAR 2½" Ø HOLE.

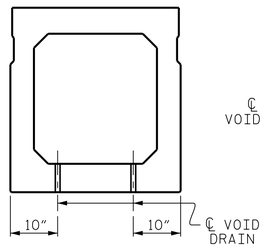


SECTION B-B

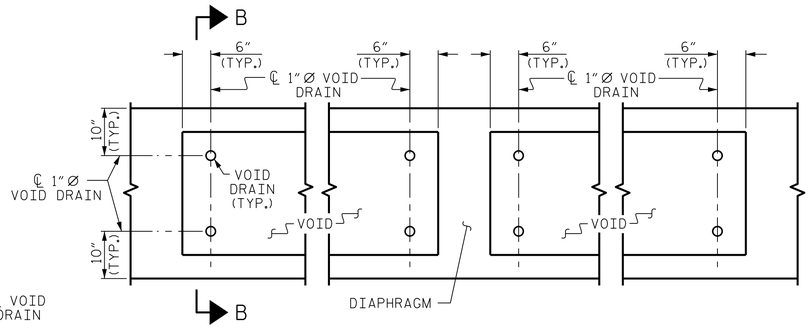


PART PLAN

## VOID DRAIN DETAILS

(DIMENSIONS SHOWN ARE TYPICAL FOR EACH VOID)

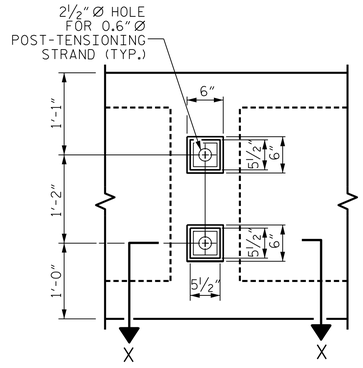


VIEW Y-Y

SHOWING ELEVATION VIEW OF GROUTED RECESS

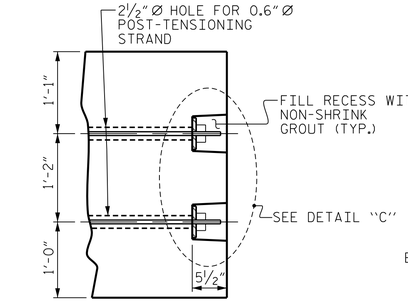


PART SECTION AT RECESS

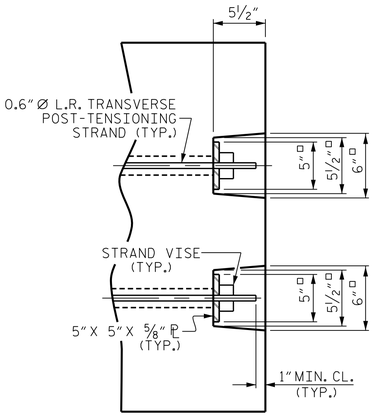


DETAIL "C"

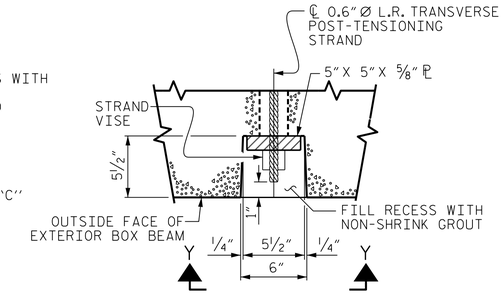


SECTION X-X

SHOWING PLAN VIEW OF GROUTED RECESS

## GROUTED RECESS DETAIL AT END OF POST-TENSIONED STRANDS OF EXTERIOR BOX BEAM

| DEAD LOAD DEFLECTION AND CAMBER | |
|---|---|
| | 3'-0" x 3'-3" |
| 100' BOX BEAM UNIT | 0.6" Ø L.R. STRAND |
| CAMBER ( SLAB ALONE IN PLACE ) | 2" ↑ |
| DEFLECTION DUE TO SUPERIMPOSED DEAD LOAD ** | ⅞" ↓ |
| FINAL CAMBER | 1⅛" ↑ |

** INCLUDES FUTURE WEARING SURFACE

PROJECT NO. 17BP.8.R.70

RANDOLPH COUNTY

STATION: 13+72.50 -L-

SHEET 4 OF 5

NORTH CAROLINA PROFESSIONAL ENGINEER SEAL 24939 BYRON E. ATKINSON

7/26/2017

DOCUMENT NOT CONSIDERED FINAL UNLESS ALL SIGNATURES COMPLETED

MI ENGINEERING
1011 SCHAUB DRIVE, SUITE 100
RALEIGH, NC 27606
(919) 851-6606
FIRM PE NUMBER : P-0671

STATE OF NORTH CAROLINA
DEPARTMENT OF TRANSPORTATION
RALEIGH

# STANDARD 3'-0" X 3'-3" PRESTRESSED CONCRETE BOX BEAM UNIT SPAN B

| REVISIONS | | | | | | SHEET NO. |
|---|---|---|---|---|---|---|
| NO. | BY: | DATE: | NO. | BY: | DATE: | S-14 |
| 1 | | | 3 | | | TOTAL SHEETS |
| 2 | | | 4 | | | 26 |

| | | |
|---|---|---|
| ASSEMBLED BY: | B.E. LANNING | DATE: 07/17 |
| CHECKED BY : | B.E. ATKINSON | DATE: 07/17 |
| DESIGN ENGINEER OF RECORD: | B.E. ATKINSON | DATE: 07/17 |
| DRAWN BY : DGE II/II | REV. 8/14 | MAA/TMG |
| CHECKED BY : TMG II/II | | |

STD.NO.39PCBB7_90S

7/26/2017
3:05:59 PM
User: blanning
Filename: P:\NC Bridges\2013 Archive\MI3010 - Div 08 Bridge Replacements_CH Engr\MI3010.04_Randolph 212\17BP8R70\Structures\401_027_17BP8R70_SD_BBU4.dgn

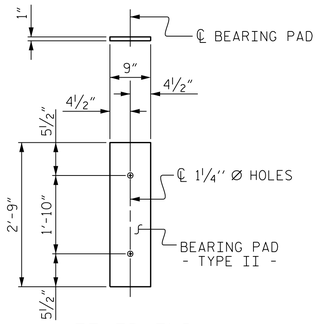


FIXED END

( TYPE II - 22 REQ'D. )

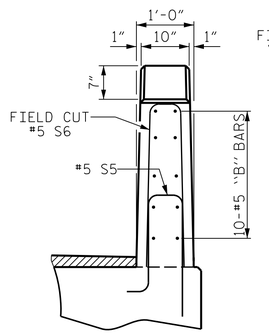


END VIEW

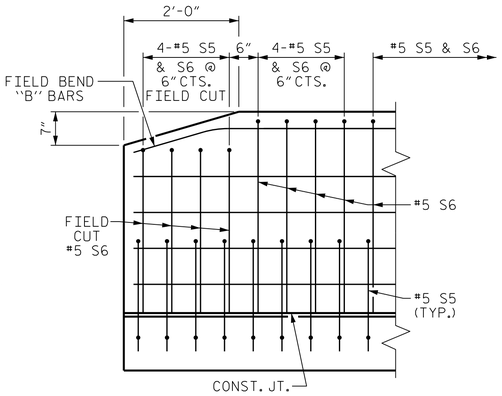


SIDE VIEW

## ELASTOMERIC BEARING DETAILS

ELASTOMER IN ALL BEARINGS SHALL BE 60 DUROMETER HARDNESS.

## END OF RAIL DETAILS

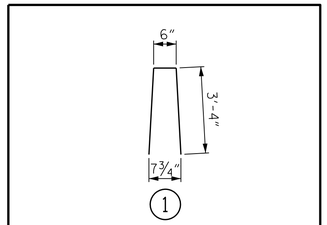


## BAR TYPE

BAR DIMENSIONS ARE OUT TO OUT.

## BOX BEAM UNITS REQUIRED

| | NUMBER | LENGTH | TOTAL LENGTH |
|---|---|---|---|
| EXTERIOR B.B. | 2 | 100'-0" | 200'-0" |
| INTERIOR B.B. | 9 | 100'-0" | 900'-0" |
| TOTAL | 11 | ——— | 1100'-0" |

## GUTTERLINE ASPHALT THICKNESS & RAIL HEIGHT

| | ASPHALT OVERLAY THICKNESS @ MID-SPAN | RAIL HEIGHT @ MID-SPAN |
|---|---|---|
| 100' UNITS | ⊕ 1⅞" | 3'-8⅞" |

⊕ INCLUDES IMPACT OF SAG VERTICAL CURVE ALONG GRADE LINE -L-.

## BILL OF MATERIAL FOR VERTICAL CONCRETE BARRIER RAIL

| BAR | BARS PER PAIR OF EXTERIOR UNITS 100' UNIT | SIZE | TYPE | LENGTH | WEIGHT |
|---|---|---|---|---|---|
| ✱B12 | 96 | #5 | STR | 24'-7" | 2461 |
| ✱ S6 | 276 | #5 | 1 | 7'-2" | 2063 |
| ✱EPOXY COATED REINFORCING STEEL | | | LBS. | | 4524 |
| CLASS AA CONCRETE | | | CU.YDS. | | 25.9 |
| TOTAL VERTICAL CONCRETE BARRIER RAIL | | | LN. FT. | | 200.0 |

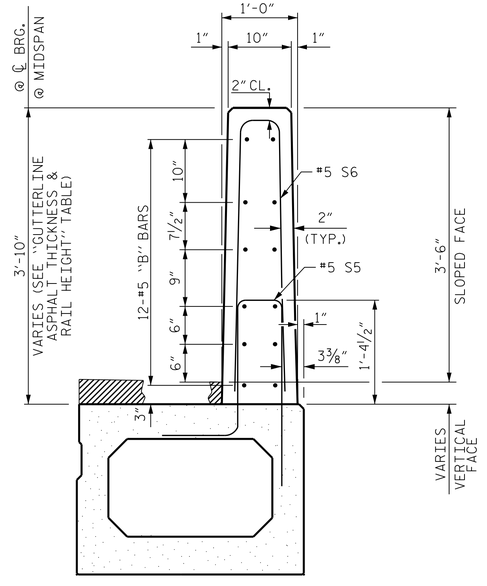


SECTION THRU RAIL

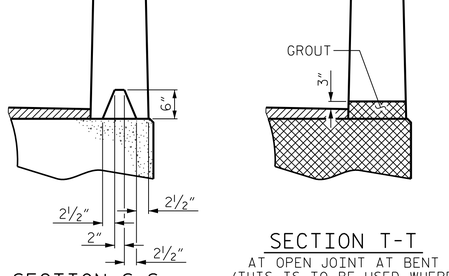


SECTION S-S

AT DAM IN OPEN JOINT
(THIS IS TO BE USED ONLY WHEN SLIP FORM IS USED)




SECTION T-T

AT OPEN JOINT AT BENT
(THIS IS TO BE USED WHERE FOAM JOINT IS NOT USED)

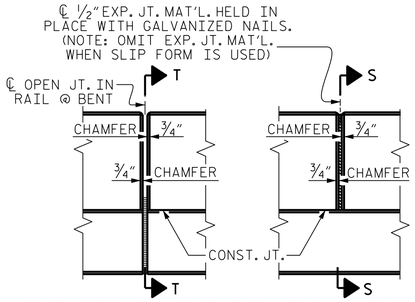


ELEVATION AT EXPANSION JOINTS

## VERTICAL CONCRETE BARRIER RAIL DETAILS

PROJECT NO. 17BP.8.R.70

RANDOLPH COUNTY

STATION: 13+72.50 -L-

SHEET 5 OF 5

NORTH CAROLINA PROFESSIONAL ENGINEER SEAL 24939 ENGINEER BYRON E. ATKINSON

7/26/2017

**DOCUMENT NOT CONSIDERED FINAL UNLESS ALL SIGNATURES COMPLETED**


MI ENGINEERING
1011 SCHAUB DRIVE, SUITE 100
RALEIGH, NC 27606
(919) 851-6606
FIRM PE NUMBER : P-0671


STATE OF NORTH CAROLINA
DEPARTMENT OF TRANSPORTATION
RALEIGH

STANDARD
3'-0" X 3'-3"
PRESTRESSED CONCRETE
BOX BEAM UNIT
SPAN B

| REVISIONS | | | | | | SHEET NO. |
|---|---|---|---|---|---|---|
| NO. | BY: | DATE: | NO. | BY: | DATE: | S-15 |
| 1 | | | 3 | | | TOTAL SHEETS |
| 2 | | | 4 | | | 26 |

| | | |
|---|---|---|
| ASSEMBLED BY: | B.E. LANNING | DATE: 07/17 |
| CHECKED BY : | B.E. ATKINSON | DATE: 07/17 |
| DESIGN ENGINEER OF RECORD: | B.E. ATKINSON | DATE: 07/17 |
| DRAWN BY : | DGE 10/11 | REV. 4/15 MAA/TMG |
| CHECKED BY : | TMG 11/11 | |

7/26/2017
3:06:01 PM
User: blanning
Filename: P:\NC Bridges\2013 Archive\MI3010 - Div 08 Bridge Replacements_CH Engr\MI3010.04_Randolph 212\17BP8R70\Structures\401_029_17BP8R70_SD_BBU5.dgn

STD. NO. 39PCBB8_90S

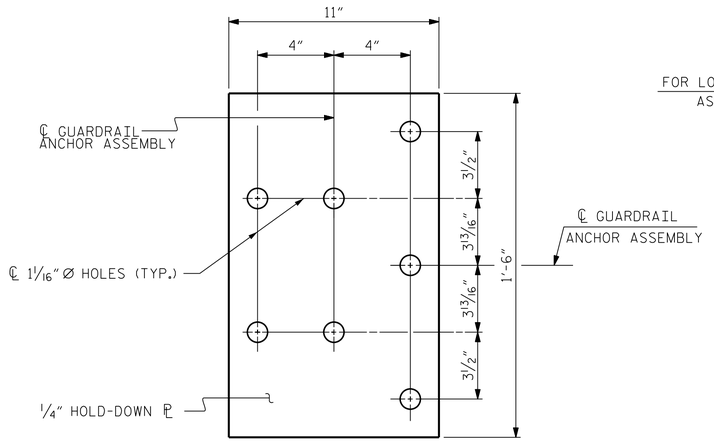


PLAN

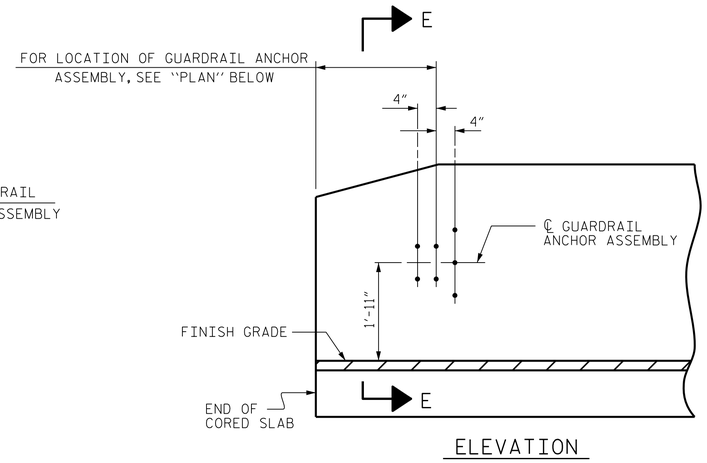


ELEVATION

## NOTES

THE GUARDRAIL ANCHOR ASSEMBLY SHALL CONSIST OF A 1/4" HOLD DOWN PLATE AND 7 - 7/8" Ø BOLTS WITH NUTS AND WASHERS.

THE HOLD-DOWN PLATE SHALL CONFORM TO AASHTO M270 GRADE 36. AFTER FABRICATION, THE HOLD-DOWN PLATE SHALL BE HOT-DIP GALVANIZED IN ACCORDANCE WITH AASHTO M111.

BOLTS SHALL CONFORM TO THE REQUIREMENTS OF ASTM A307 AND NUTS SHALL CONFORM TO THE REQUIREMENTS OF AASHTO M291. BOLTS, NUTS AND WASHERS SHALL BE GALVANIZED. (AT THE CONTRACTOR'S OPTION, STAINLESS STEEL BOLTS, NUTS AND WASHERS MAY BE USED AS AN ALTERNATE FOR THE 7/8" Ø GALVANIZED BOLTS, NUTS AND WASHERS. THEY SHALL CONFORM TO OR EXCEED THE MECHANICAL REQUIREMENTS OF ASTM A307. THE USE OF THIS ALTERNATE SHALL BE APPROVED BY THE ENGINEER.)

THE GUARDRAIL ANCHOR ASSEMBLY IS REQUIRED AT ALL POINTS WHERE APPROACH GUARDRAIL IS TO BE ATTACHED TO THE END OF BARRIER RAIL. FOR POINTS OF ATTACHMENT, SEE SKETCH.

AFTER INSTALLATION, THE EXPOSED THREAD OF THE BOLT SHALL BE BURRED WITH A SHARP POINTED TOOL.

THE COST OF THE GUARDRAIL ANCHOR ASSEMBLY SHALL BE INCLUDED IN THE UNIT CONTRACT PRICE BID FOR VERTICAL CONCRETE BARRIER RAIL.

THE VERTICAL REINFORCING BARS MAY BE SHIFTED SLIGHTLY IN THE VERTICAL CONCRETE BARRIER RAIL TO CLEAR ASSEMBLY BOLTS.

THE 1 1/4" Ø HOLES SHALL BE FORMED OR DRILLED WITH A CORE BIT. IMPACT TOOLS WILL NOT BE PERMITTED. ANY CONCRETE DAMAGED BY THIS WORK SHALL BE REPAIRED TO THE SATISFACTION OF THE ENGINEER.

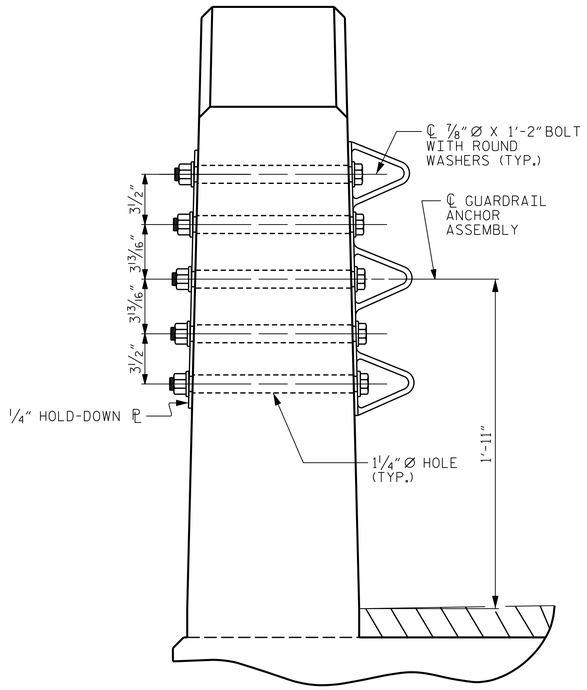


SECTION E-E

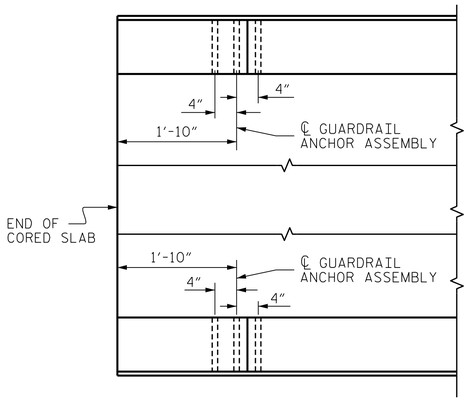


PLAN

# GUARDRAIL ANCHOR ASSEMBLY DETAILS

## SKETCH SHOWING POINTS OF ATTACHMENT

✳ DENOTES GUARDRAIL ANCHOR ASSEMBLY

# LOCATION OF ANCHORS FOR GUARDRAIL

END BENT #1 SHOWN, END BENT #2 SIMILAR.

PROJECT NO. 17BP.8.R.70

RANDOLPH COUNTY

STATION: 13+72.50 -L-

NORTH CAROLINA PROFESSIONAL ENGINEER SEAL 24939 BYRON E. ATKINSON

7/26/2017

**DOCUMENT NOT CONSIDERED FINAL UNLESS ALL SIGNATURES COMPLETED**

MI ENGINEERING
1011 SCHAUB DRIVE, SUITE 100
RALEIGH, NC 27606
(919) 851-6606
FIRM PE NUMBER : P-0671

STATE OF NORTH CAROLINA
DEPARTMENT OF TRANSPORTATION
RALEIGH

STANDARD
GUARDRAIL ANCHORAGE FOR VERTICAL CONCRETE BARRIER RAIL

| REVISIONS | | | | | | SHEET NO. |
|---|---|---|---|---|---|---|
| NO. | BY: | DATE: | NO. | BY: | DATE: | S-16 |
| 1 | | | 3 | | | TOTAL SHEETS |
| 2 | | | 4 | | | 26 |

(SHT 1) STD. NO. GRA3

| | | | |
|---|---|---|---|
| ASSEMBLED BY: | B.E. LANNING | DATE: | 07/17 |
| CHECKED BY : | B.E. ATKINSON | DATE: | 07/17 |
| DESIGN ENGINEER OF RECORD: | B.E. ATKINSON | DATE: | 07/17 |
| DRAWN BY : MAA 5/10 | REV. 12/5/11 | | MAA/GM |
| CHECKED BY : GM 5/10 | REV. 6/13 | | MAA/GM |
| | REV. 1/15 | | MAA/TMG |

7/26/2017
3:06:03 PM
User: blanning
Filename: P:\NC Bridges\2013 Archive\MI3010 - Div 08 Bridge Replacements_CH Engr\MI3010.04_Randolph 212\17BP8R70\Structures\401_031_17BP8R70_SD_GRA1.dgn

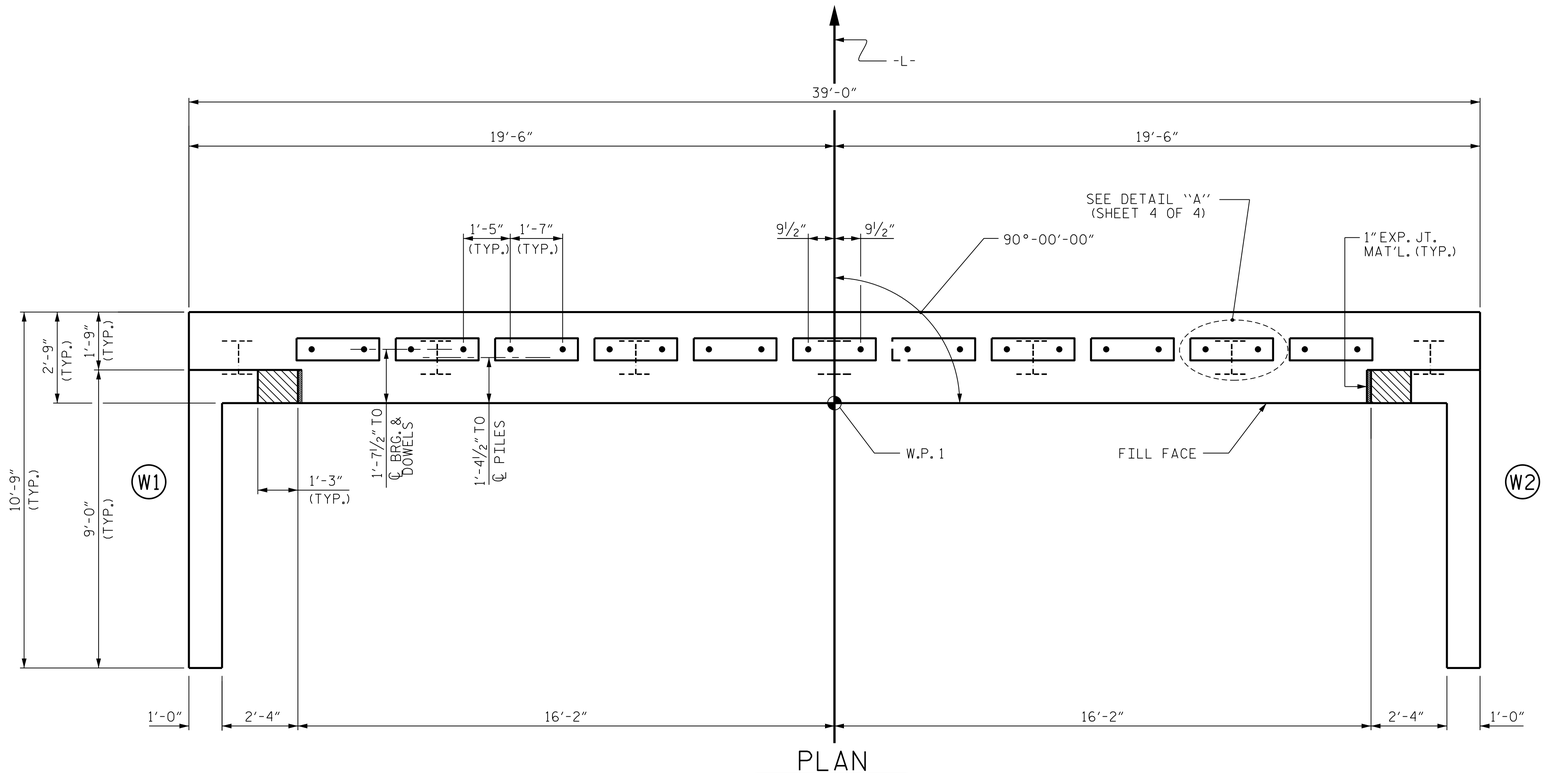


## PLAN

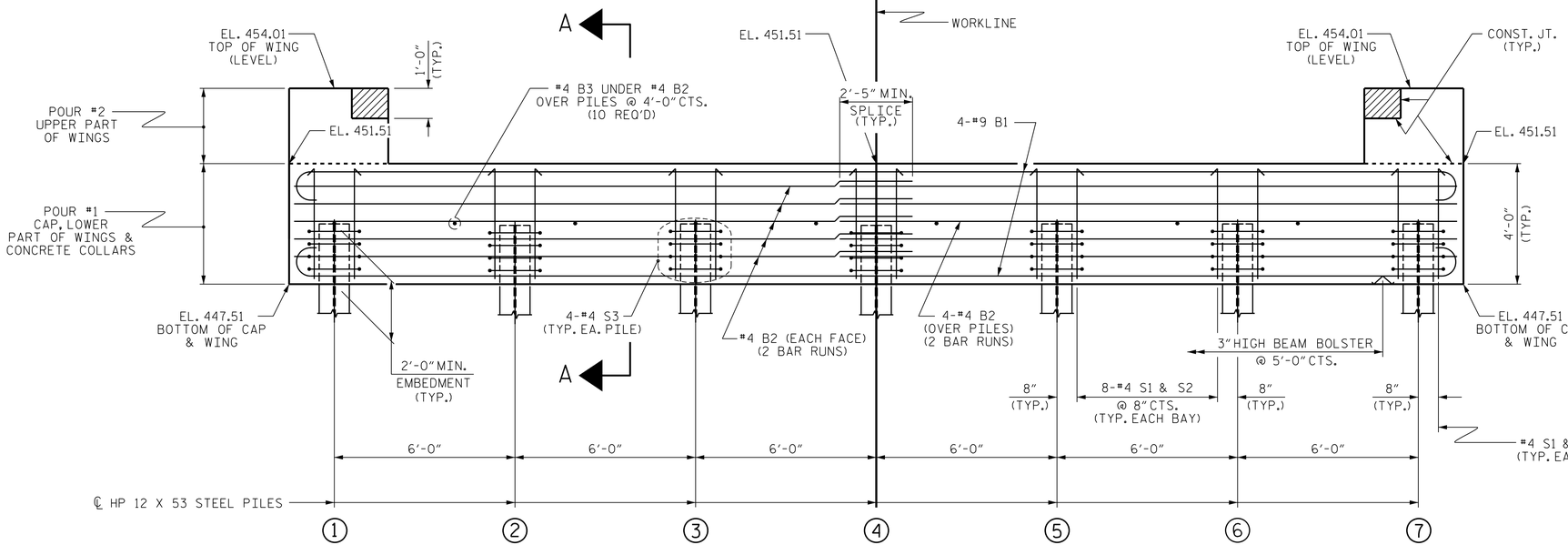


## ELEVATION

WINGS NOT SHOWN FOR CLARITY.
FOR SECTION A-A, SEE SHEET 4 OF 4.
CONCRETE COLLARS FOR STEEL PILES NOT SHOWN IN PLAN AND ELEVATION VIEWS FOR CLARITY.
SEE "CORROSION PROTECTION FOR STEEL PILES DETAIL", SHEET 4 OF 4.

## NOTES

STIRRUPS IN CAP MAY BE SHIFTED AS NECESSARY TO CLEAR DOWELS.

THE CONCRETE IN THE SHADED AREA OF THE WING SHALL BE POURED AFTER THE VERTICAL CONCRETE BARRIER RAIL IS CAST IF SLIP FORMING IS USED.

FOR PILE SPLICE DETAILS, SEE SHEET 4 OF 4.

FOR WING DETAILS, SEE SHEET 3 OF 4.

PROJECT NO. 17BP.8.R.70
RANDOLPH COUNTY
STATION: 13+72.50 -L-

SHEET 1 OF 4

STATE OF NORTH CAROLINA
DEPARTMENT OF TRANSPORTATION
RALEIGH

SUBSTRUCTURE

END BENT No. 1

NORTH CAROLINA PROFESSIONAL SEAL 24939 ENGINEER BYRON E. ATKINSON
7/26/2017

| | | |
|---|---|---|
| ASSEMBLED BY: | B.E. LANNING | DATE: 07/17 |
| CHECKED BY : | B.E. ATKINSON | DATE: 07/17 |
| DESIGN ENGINEER OF RECORD: | B.E. ATKINSON | DATE: 07/17 |
| DRAWN BY : WJH 12/11 | REV. 4/15 MAA/TMG | |
| CHECKED BY : AAC 12/11 | | |

**DOCUMENT NOT CONSIDERED FINAL UNLESS ALL SIGNATURES COMPLETED**

MI ENGINEERING
1011 SCHAUB DRIVE, SUITE 100
RALEIGH, NC 27606
(919) 851-6606
FIRM PE NUMBER : P-0671

| REVISIONS | | | | | | SHEET NO. |
|---|---|---|---|---|---|---|
| NO. | BY: | DATE: | NO. | BY: | DATE: | S-17 |
| 1 | | | 3 | | | TOTAL SHEETS |
| 2 | | | 4 | | | 26 |

STD. NO. EB_33_90S4

7/26/2017
3:06:05 PM
User: blanning
Filename: P:\NC Bridges\2013 Archive\MI3010 - Div 08 Bridge Replacements_CH Engr\MI3010.04_Randolph 212\17BP8R70\Structures\401_033_17BP8R70_SD_EB1.dgn

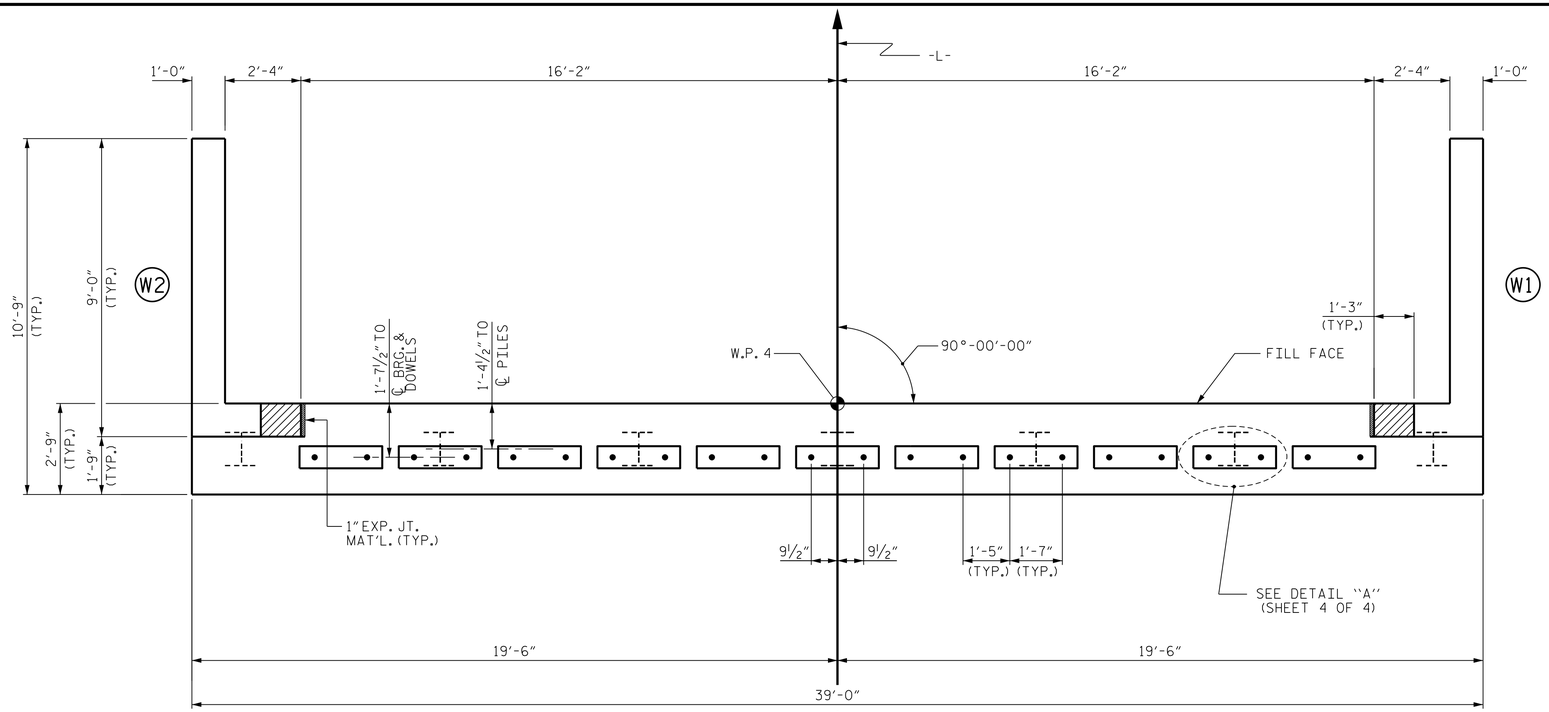


## PLAN

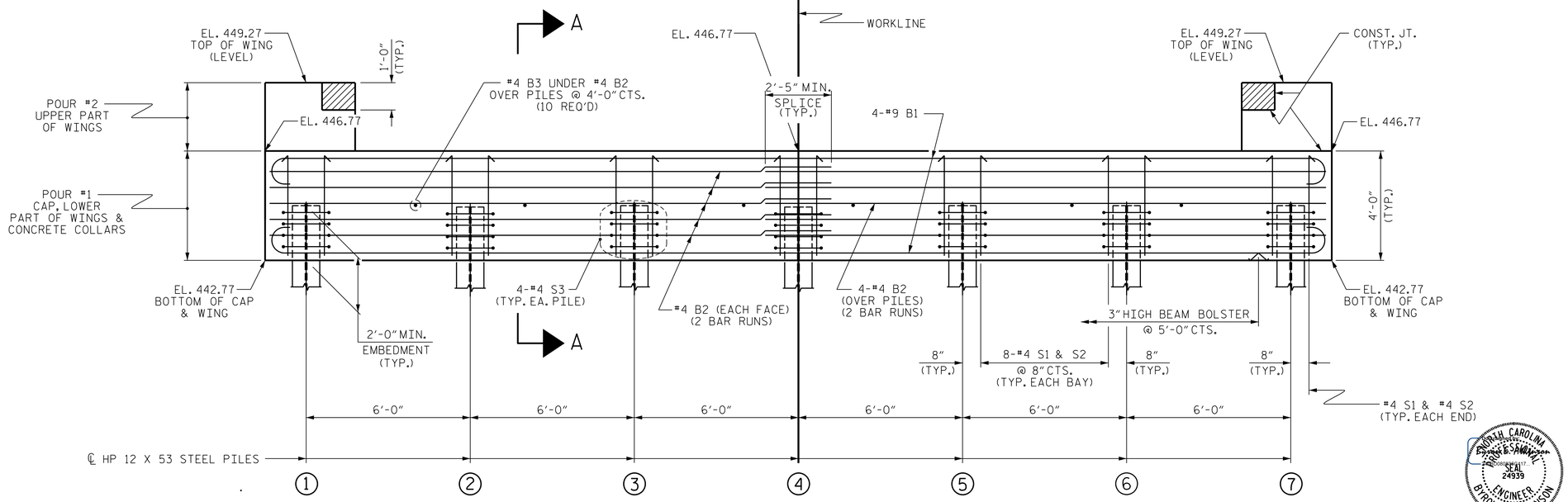


## ELEVATION

WINGS NOT SHOWN FOR CLARITY.
FOR SECTION A-A, SEE SHEET 4 OF 4.
CONCRETE COLLARS FOR STEEL PILES NOT SHOWN IN PLAN AND ELEVATION VIEWS FOR CLARITY.
SEE "CORROSION PROTECTION FOR STEEL PILES DETAIL", SHEET 4 OF 4.

## NOTES

STIRRUPS IN CAP MAY BE SHIFTED AS NECESSARY TO CLEAR DOWELS.

THE CONCRETE IN THE SHADED AREA OF THE WING SHALL BE POURED AFTER THE VERTICAL CONCRETE BARRIER RAIL IS CAST IF SLIP FORMING IS USED.

FOR PILE SPLICE DETAILS, SEE SHEET 4 OF 4.

FOR WING DETAILS, SEE SHEET 3 OF 4.

PROJECT NO. 17BP.8.R.70
RANDOLPH COUNTY
STATION: 13+72.50 -L-

SHEET 2 OF 4

STATE OF NORTH CAROLINA
DEPARTMENT OF TRANSPORTATION
RALEIGH

SUBSTRUCTURE

END BENT No. 2

NORTH CAROLINA PROFESSIONAL ENGINEER SEAL 24939 ENGINEER BYRON E. ATKINSON
7/26/2017

| | | | |
|---|---|---|---|
| ASSEMBLED BY: | B.E. LANNING | DATE: | 07/17 |
| CHECKED BY : | B.E. ATKINSON | DATE: | 07/17 |
| DESIGN ENGINEER OF RECORD: | B.E. ATKINSON | DATE: | 07/17 |
| DRAWN BY : | WJH 12/11 | REV. | 4/15 MAA/TMG |
| CHECKED BY : | AAC 12/11 | | |

**DOCUMENT NOT CONSIDERED FINAL UNLESS ALL SIGNATURES COMPLETED**

MI ENGINEERING
1011 SCHAUB DRIVE, SUITE 100
RALEIGH, NC 27606
(919) 851-6606
FIRM PE NUMBER : P-0671

| REVISIONS | | | | | | SHEET NO. |
|---|---|---|---|---|---|---|
| NO. | BY: | DATE: | NO. | BY: | DATE: | S-18 |
| 1 | | | 3 | | | TOTAL SHEETS |
| 2 | | | 4 | | | 26 |

STD. NO. EB_33_90S4

7/26/2017 3:06:07 PM
User: blanning
Filename: P:\NC Bridges\2013 Archive\WI3010 - Div 08 Bridge Replacements_CH Engr\WI3010.04_Randolph 212\17BP8R70\Structures\401_035_17BP8R70_SD_EB2.dgn

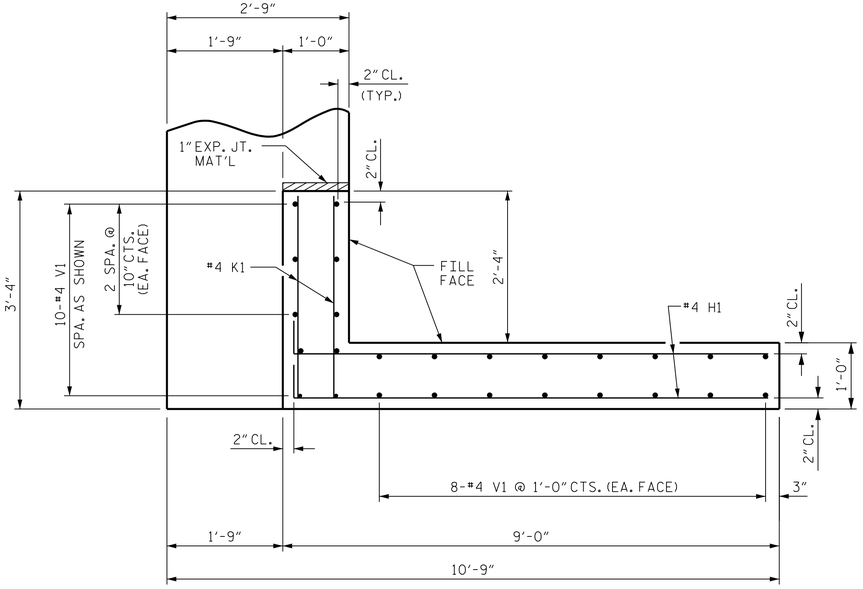


PLAN OF WING (W1)

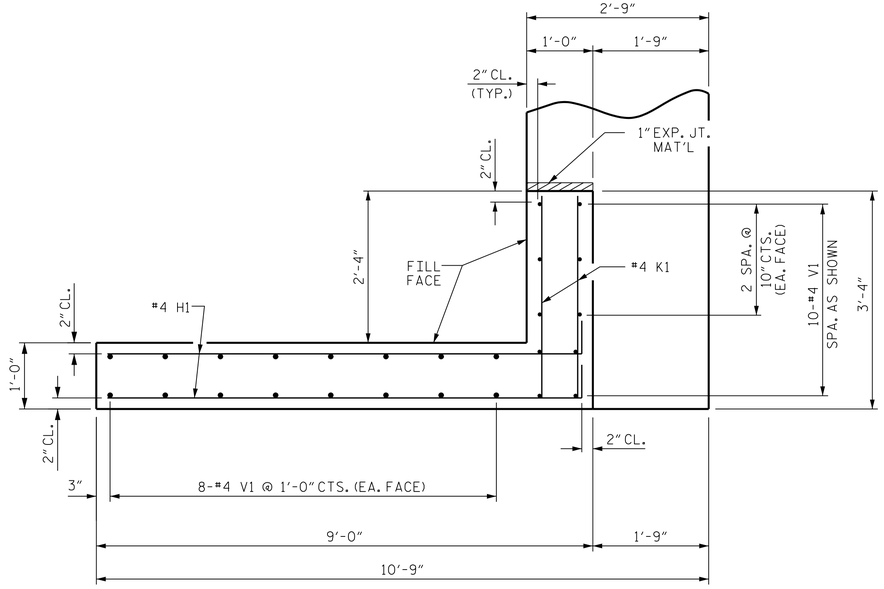


PLAN OF WING (W2)

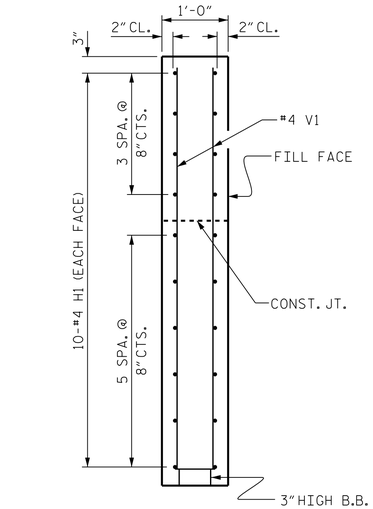


SECTION X-X

X

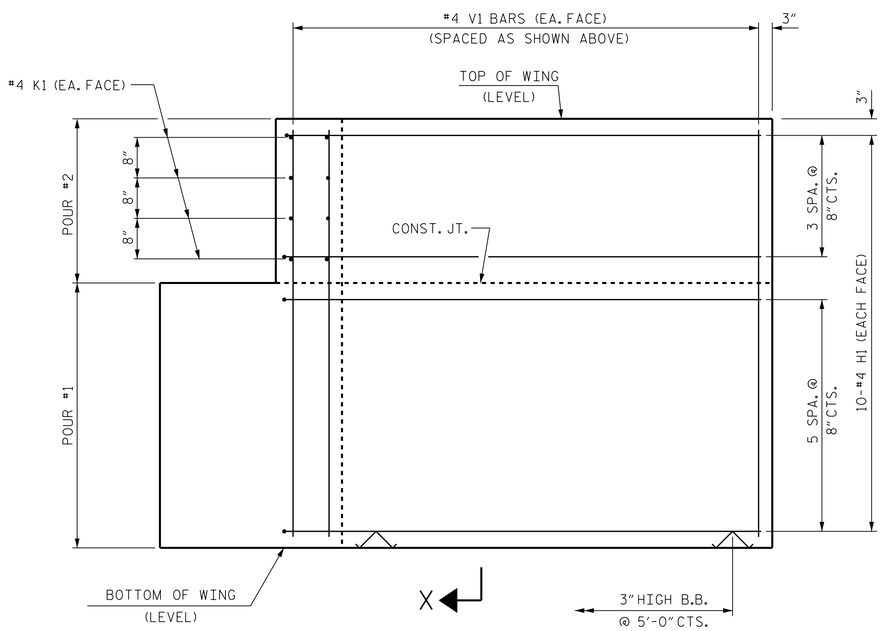


ELEVATION OF WING (W1)

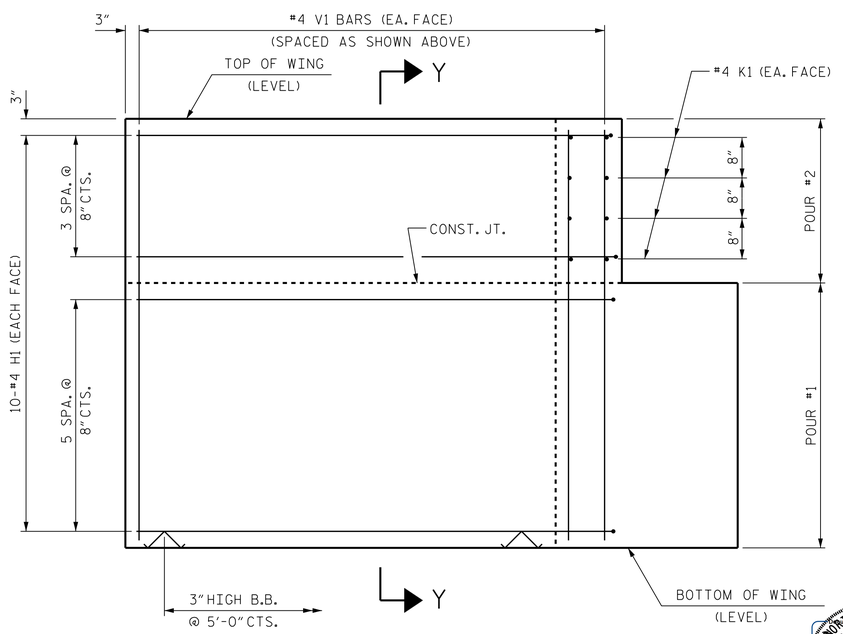


ELEVATION OF WING (W2)

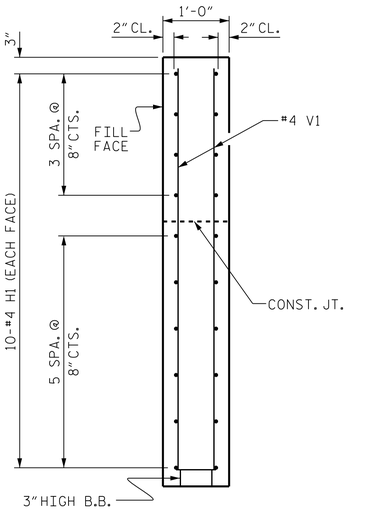


SECTION Y-Y

WING DETAILS

PROJECT NO. 17BP.8.R.70

RANDOLPH COUNTY

STATION: 13+72.50 -L-

SHEET 3 OF 4

STATE OF NORTH CAROLINA
DEPARTMENT OF TRANSPORTATION
RALEIGH

SUBSTRUCTURE

END BENT
WING DETAILS

NORTH CAROLINA PROFESSIONAL SEAL 24939 ENGINEER BYRON E. ATKINSON
7/26/2017

| | | |
|---|---|---|
| ASSEMBLED BY: | B.E. LANNING | DATE: 07/17 |
| CHECKED BY : | B.E. ATKINSON | DATE: 07/17 |
| DESIGN ENGINEER OF RECORD: | B.E. ATKINSON | DATE: 07/17 |
| DRAWN BY : WJH 12/11 | REV. 4/15 | MAA/TMG |
| CHECKED BY : AAC 12/11 | | |

**DOCUMENT NOT CONSIDERED FINAL UNLESS ALL SIGNATURES COMPLETED**

MI ENGINEERING
1011 SCHAUB DRIVE, SUITE 100
RALEIGH, NC 27606
(919) 851-6606
FIRM PE NUMBER : P-0671

| REVISIONS | | | | | | SHEET NO. |
|---|---|---|---|---|---|---|
| NO. | BY: | DATE: | NO. | BY: | DATE: | S-19 |
| 1 | | | 3 | | | TOTAL SHEETS |
| 2 | | | 4 | | | 26 |

STD. NO. EB_33_90S4

7/26/2017 3:06:09 PM
User: blanning
Filename: P:\NC Bridges\2013 Archive\MI3010 - Div 08 Bridge Replacements_CH Engr\MI3010.04_Randolph 212\17BP8R70\Structures\401_037_17BP8R70_SD_EB3.dgn

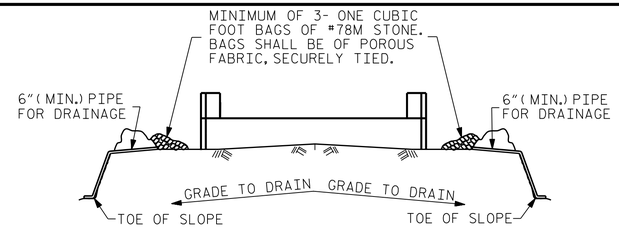


BAGGED STONE AND PIPE SHALL BE PLACED IMMEDIATELY AFTER COMPLETION OF END BENT EXCAVATION. PIPE MAY BE EITHER CONCRETE, CORRUGATED STEEL, CORRUGATED ALUMINUM ALLOY, OR CORRUGATED PLASTIC. PERFORATED PIPE WILL NOT BE ALLOWED.

BAGGED STONE SHALL REMAIN IN PLACE UNTIL THE ENGINEER DIRECTS THAT IT BE REMOVED. THE CONTRACTOR SHALL REMOVE AND DISPOSE OF SILT ACCUMULATIONS AT BAGGED STONE WHEN SO DIRECTED BY THE ENGINEER. BAGS SHALL BE REMOVED AND REPLACED WHENEVER THE ENGINEER DETERMINES THAT THEY HAVE DETERIORATED AND LOST THEIR EFFECTIVENESS.

NO SEPARATE PAYMENT WILL BE MADE FOR THIS WORK AND THE ENTIRE COST OF THIS WORK SHALL BE INCLUDED IN THE UNIT CONTRACT PRICE BID FOR THE SEVERAL PAY ITEMS.

## TEMPORARY DRAINAGE AT END BENT

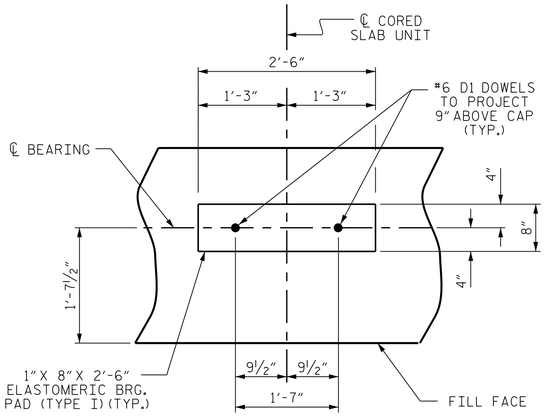


## DETAIL "A"

(END BENT No. 1 SHOWN, END BENT No. 2 SIMILAR BY ROTATION)

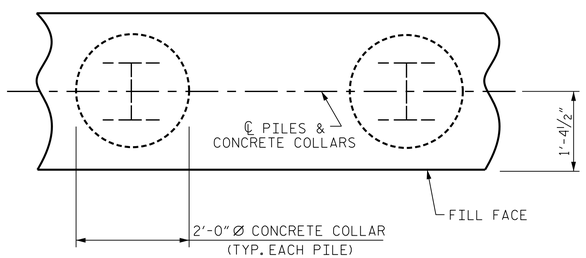


PLAN

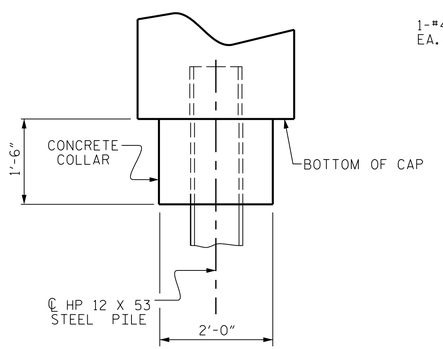


ELEVATION

## CORROSION PROTECTION FOR STEEL PILES DETAIL

(END BENT No. 1 SHOWN, END BENT No. 2 SIMILAR BY ROTATION)

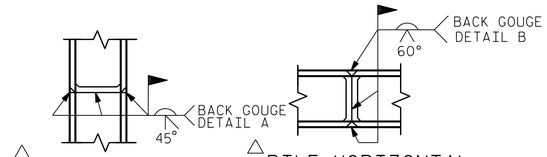


△ PILE VERTICAL

△ PILE HORIZONTAL OR VERTICAL

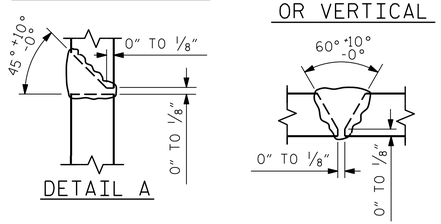


DETAIL A

DETAIL B

△ POSITION OF PILE DURING WELDING.

## PILE SPLICE DETAILS

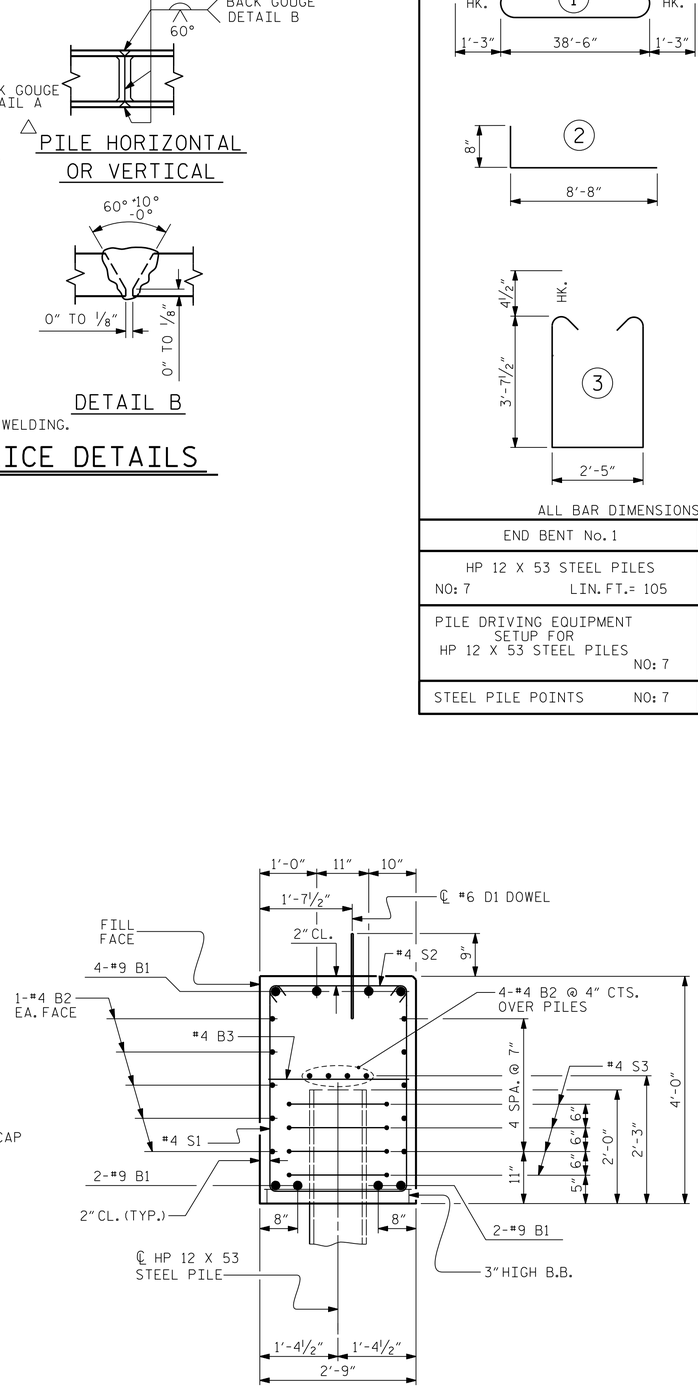


## SECTION A-A

(CONCRETE COLLAR NOT SHOWN FOR CLARITY. SEE "CORROSION PROTECTION FOR STEEL PILES DETAIL.")

## BAR TYPES

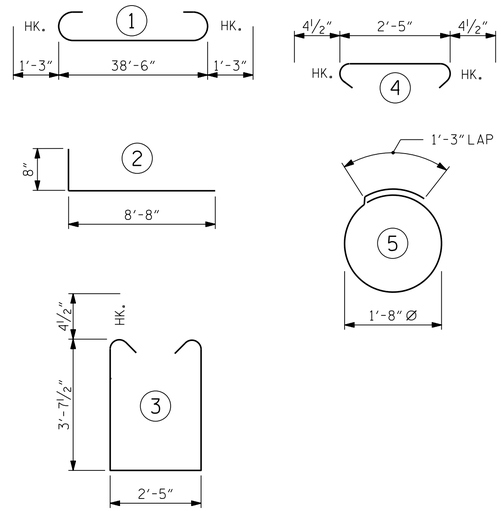


ALL BAR DIMENSIONS ARE OUT TO OUT.

| END BENT No. 1 | END BENT No. 2 |
|---|---|
| HP 12 X 53 STEEL PILES NO: 7 LIN. FT.= 105 | HP 12 X 53 STEEL PILES NO: 7 LIN. FT.= 105 |
| PILE DRIVING EQUIPMENT SETUP FOR HP 12 X 53 STEEL PILES NO: 7 | PILE DRIVING EQUIPMENT SETUP FOR HP 12 X 53 STEEL PILES NO: 7 |
| STEEL PILE POINTS NO: 7 | STEEL PILE POINTS NO: 7 |

## BILL OF MATERIAL

### FOR ONE END BENT

| BAR | NO. | SIZE | TYPE | LENGTH | WEIGHT |
|---|---|---|---|---|---|
| B1 | 8 | #9 | 1 | 41'-0" | 1115 |
| B2 | 28 | #4 | STR | 20'-7" | 385 |
| B3 | 10 | #4 | STR | 2'-5" | 16 |
| D1 | 22 | #6 | STR | 1'-6" | 50 |
| H1 | 40 | #4 | 2 | 9'-4" | 249 |
| K1 | 16 | #4 | STR | 2'-11" | 31 |
| S1 | 50 | #4 | 3 | 10'-5" | 348 |
| S2 | 50 | #4 | 4 | 3'-2" | 106 |
| S3 | 28 | #4 | 5 | 6'-6" | 122 |
| V1 | 52 | #4 | STR | 6'-2" | 214 |

REINFORCING STEEL (FOR ONE END BENT) 2636 LBS.

CLASS A CONCRETE BREAKDOWN (FOR ONE END BENT)

POUR #1 CAP, LOWER PART OF WINGS & COLLARS 19.5 C.Y.

POUR #2 UPPER PART OF WINGS 2.1 C.Y.

TOTAL CLASS A CONCRETE 21.6 C.Y.

NORTH CAROLINA PROFESSIONAL SEAL 24939 ENGINEER BYRON E. ATKINSON
7/26/2017

**DOCUMENT NOT CONSIDERED FINAL UNLESS ALL SIGNATURES COMPLETED**

MI ENGINEERING
1011 SCHAUB DRIVE, SUITE 100
RALEIGH, NC 27606
(919) 851-6606
FIRM PE NUMBER : P-0671

PROJECT NO. 17BP.8.R.70
RANDOLPH COUNTY
STATION: 13+72.50 -L-

SHEET 4 OF 4

STATE OF NORTH CAROLINA
DEPARTMENT OF TRANSPORTATION
RALEIGH

SUBSTRUCTURE

# END BENT No. 1 & 2 DETAILS

| REVISIONS | | | | | | SHEET NO. |
|---|---|---|---|---|---|---|
| NO. | BY: | DATE: | NO. | BY: | DATE: | S-20 |
| 1 | | | 3 | | | TOTAL SHEETS |
| 2 | | | 4 | | | 26 |

| | | | |
|---|---|---|---|
| ASSEMBLED BY: | B.E. LANNING | DATE: | 07/17 |
| CHECKED BY : | B.E. ATKINSON | DATE: | 07/17 |
| DESIGN ENGINEER OF RECORD: | B.E. ATKINSON | DATE: | 07/17 |
| DRAWN BY : | WJH 12/11 | REV. 4/17 | MAA/THC |
| CHECKED BY : | AAC 12/11 | | |

STD. NO. EB_33_90S4

7/26/2017 3:06:11 PM
User: blanning
Filename: P:\NC Bridges\2013 Archive\MI3010 - Div 08 Bridge Replacements_CH Engr\MI3010_04_Randolph 212\17BP8R70\Structures\401_039_17BP8R70_SD_EB4.dgn

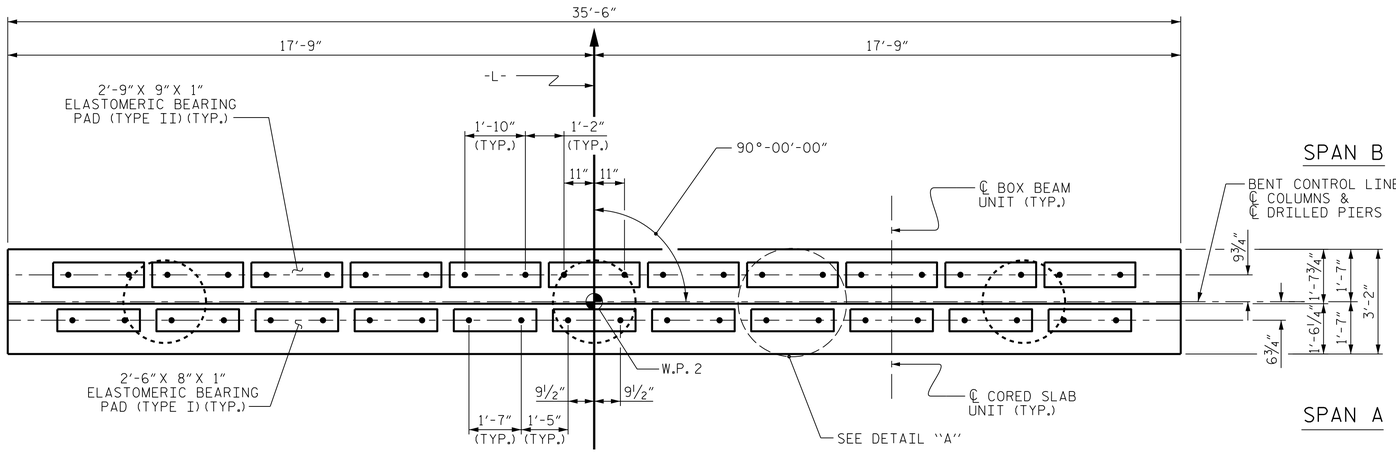


## PLAN

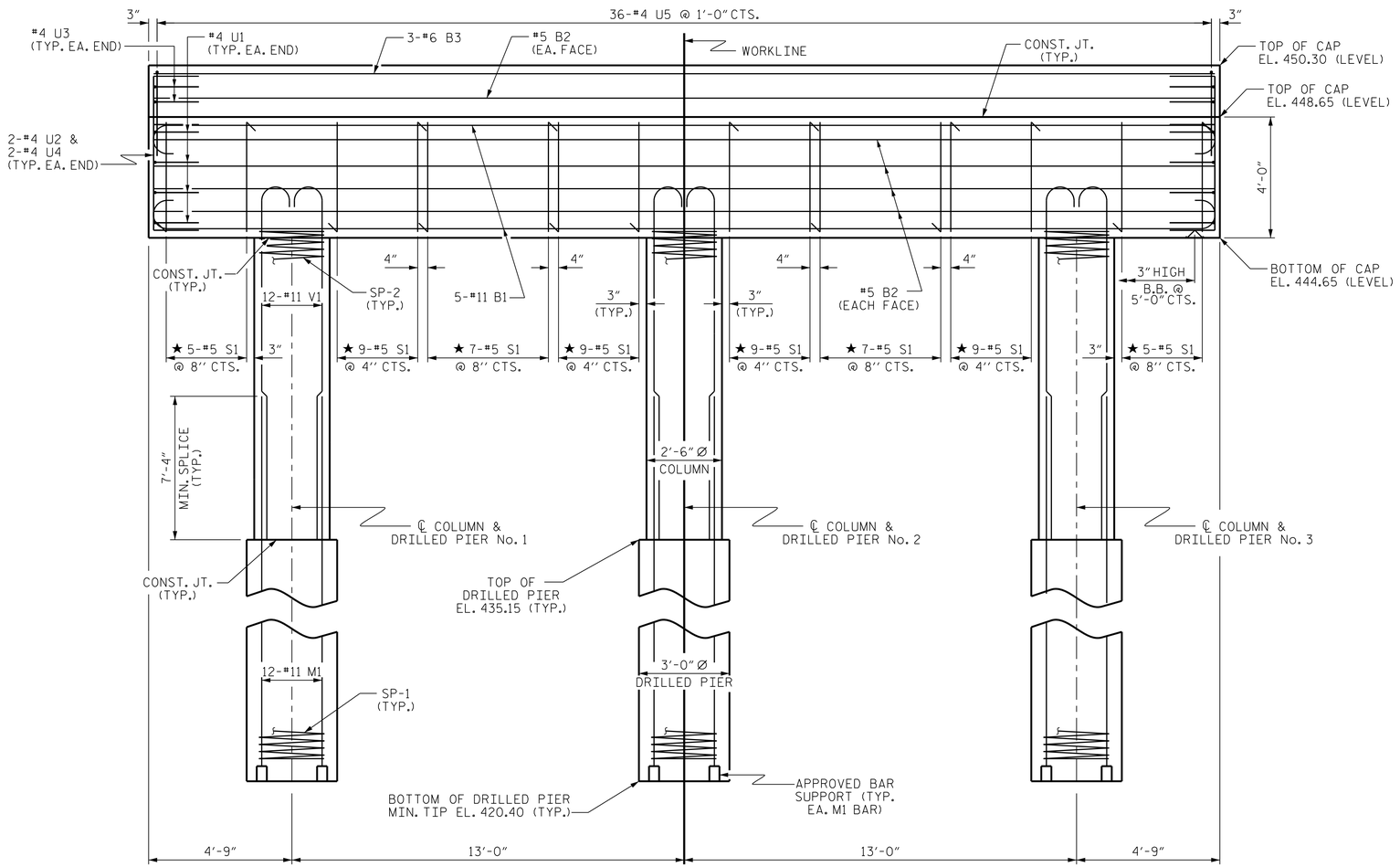


## ELEVATION

DIMENSIONS & REINFORCING STEEL ARE TYPICAL FOR EACH COLUMN & DRILLED PIER UNLESS OTHERWISE NOTED.

## NOTES

STIRRUPS AND "U" BARS IN CAP MAY BE SHIFTED AS NECESSARY TO CLEAR DOWELS.

HOOKS ON "V" BARS MAY BE TURNED AS NECESSARY FOR PLACING REINFORCING STEEL.

ALL STEEL IN THE DRILLED PIERS IS INCLUDED IN THE PAY ITEMS FOR "REINFORCING STEEL" AND "SPIRAL COLUMN REINFORCING STEEL."

★ INVERT ALTERNATE STIRRUPS.

THE LOCATION OF THE CONSTRUCTION JOINT IN THE DRILLED PIERS IS BASED ON AN APPROXIMATE GROUND LINE ELEVATION. IF THE CONSTRUCTION JOINT IS ABOVE THE ACTUAL GROUND LINE ELEVATION, THE CONTRACTOR SHALL PLACE THE CONSTRUCTION JOINT ONE FOOT BELOW THE GROUND LINE.

THE CONTRACTOR'S ATTENTION IS CALLED TO THE FACT THAT THE LONGITUDINAL REINFORCEMENT FOR DRILLED PIERS IS DETAILED WITH 3 FEET OF EXTRA LENGTH.

FOR DRILLED PIERS, SEE SECTION 411 OF THE STANDARD SPECIFICATIONS.

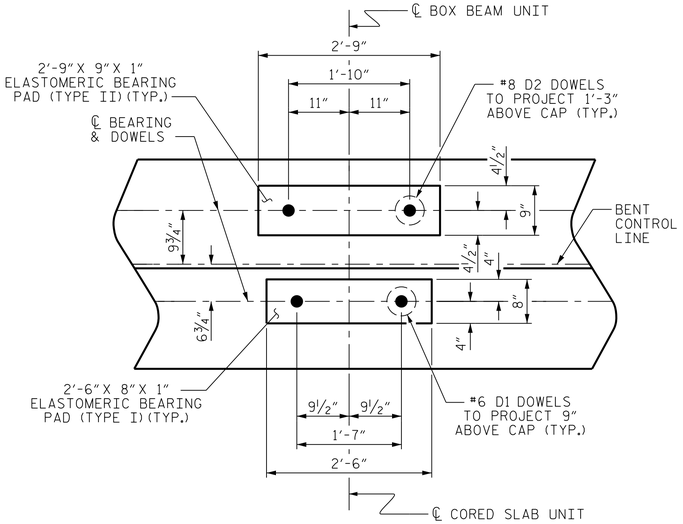


## DETAIL "A"

(DIMENSIONS ARE TYPICAL EACH BEARING)

PROJECT NO. 17BP.8.R.70

RANDOLPH COUNTY

STATION: 13+72.50 -L-

SHEET 1 OF 2

NORTH CAROLINA PROFESSIONAL ENGINEER SEAL 24939 BYRON E. ATKINSON

7/26/2017

**DOCUMENT NOT CONSIDERED FINAL UNLESS ALL SIGNATURES COMPLETED**

MI ENGINEERING
1011 SCHAUB DRIVE, SUITE 100
RALEIGH, NC 27606
(919) 851-6606
FIRM PE NUMBER : P-0671

STATE OF NORTH CAROLINA
DEPARTMENT OF TRANSPORTATION
RALEIGH

SUBSTRUCTURE

BENT No. 1

| REVISIONS | | | | | | SHEET NO. |
|---|---|---|---|---|---|---|
| NO. | BY: | DATE: | NO. | BY: | DATE: | S-21 |
| 1 | | | 3 | | | TOTAL SHEETS |
| 2 | | | 4 | | | 26 |

DRAWN BY : B.E. LANNING DATE : 07/17
CHECKED BY : B.E. ATKINSON DATE : 07/17
DESIGN ENGINEER OF RECORD : B.E. ATKINSON DATE : 07/17

7/26/2017
3:06:13 PM
User: blanning
Filename: P:\NC Bridges\2013 Archive\MI3010 - Div 08 Bridge Replacements_CH Engr\MI3010.04_Randolph 212\17BP8R70\Structures\401_041_17BP8R70_SD_BIA.dgn

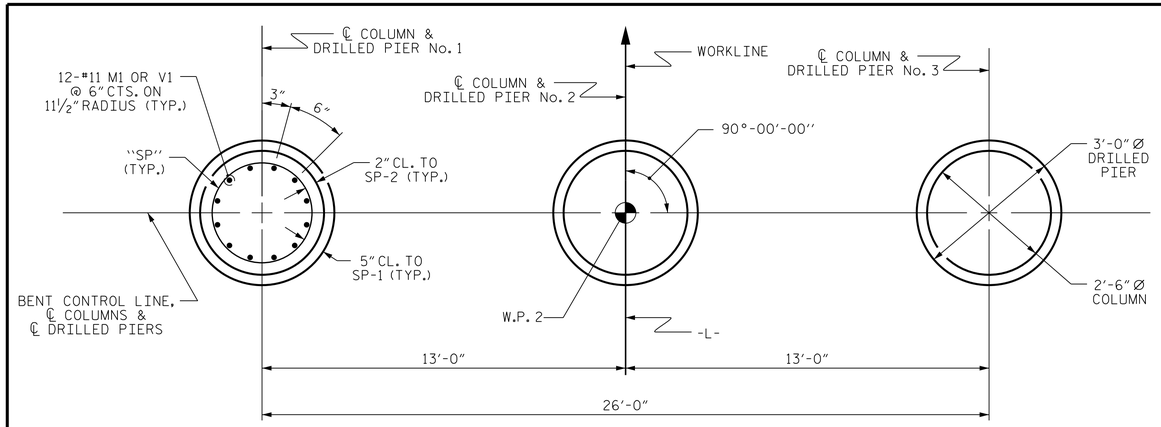


## PLAN OF DRILLED PIERS & COLUMNS

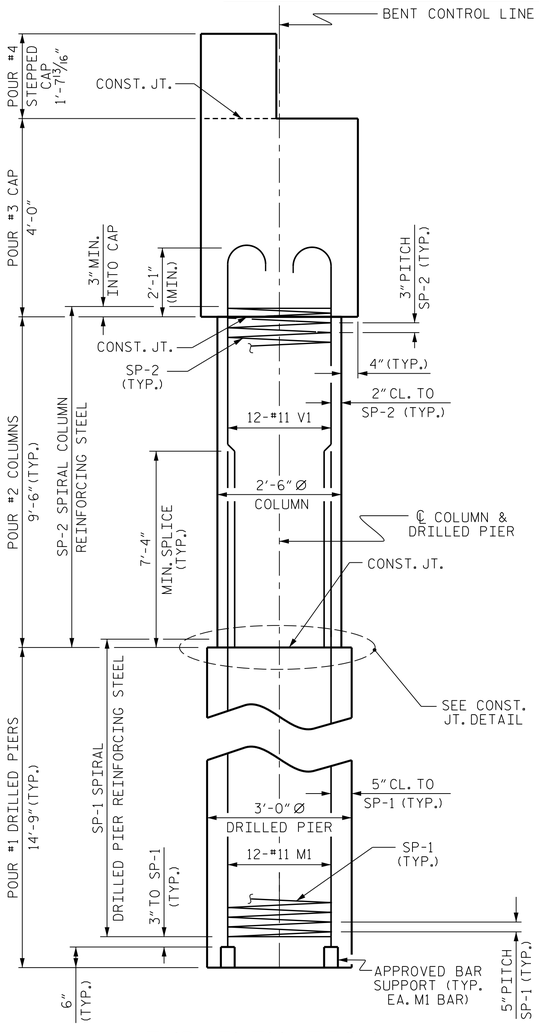


## END ELEVATION

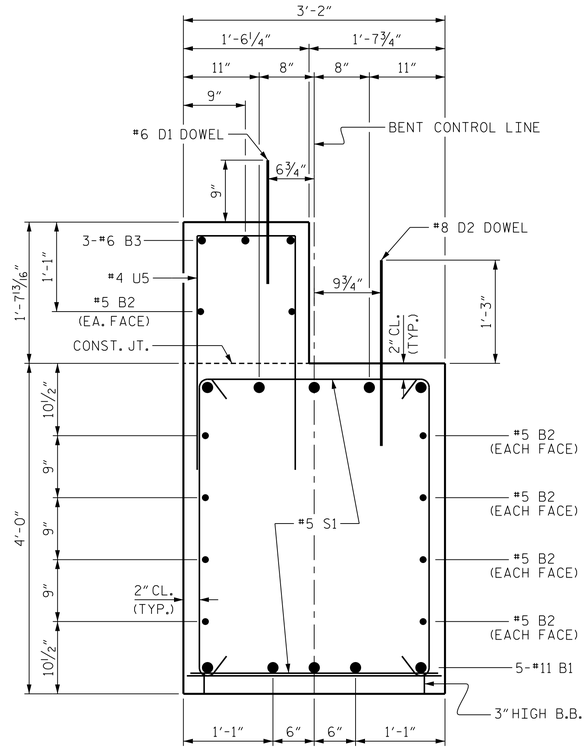


## SECTION THRU CAP

## BAR TYPES

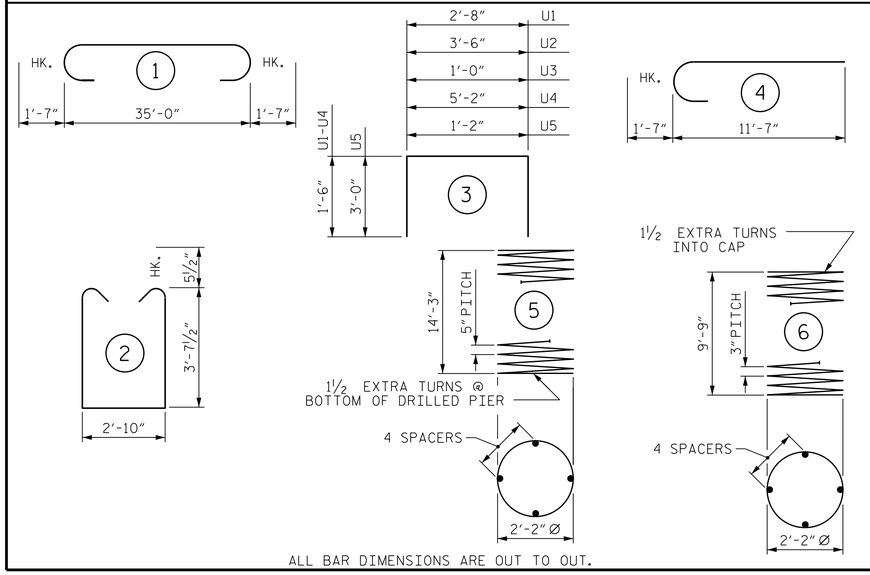


ALL BAR DIMENSIONS ARE OUT TO OUT.

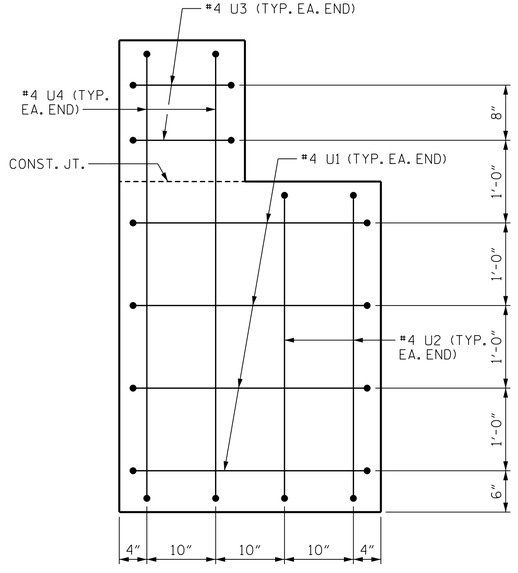


## END OF CAP VIEW

(TYPICAL BOTH ENDS)

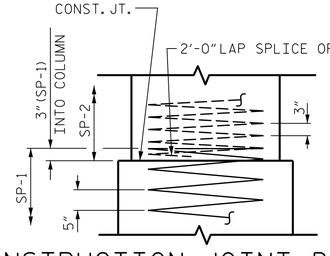


## CONSTRUCTION JOINT DETAIL

## BILL OF MATERIAL

### BENT 1

| BAR | NO. | SIZE | TYPE | LENGTH | WEIGHT |
|---|---|---|---|---|---|
| B1 | 10 | #11 | 1 | 38'-2" | 2028 |
| B2 | 10 | #5 | STR | 35'-2" | 367 |
| B3 | 3 | #6 | STR | 35'-2" | 158 |
| | | | | | |
| D1 | 22 | #6 | STR | 1'-6" | 50 |
| D2 | 22 | #8 | STR | 2'-3" | 132 |
| | | | | | |
| M1 | 36 | #11 | STR | 24'-7" | 4702 |
| | | | | | |
| S1 | 60 | #5 | 2 | 11'-0" | 688 |
| | | | | | |
| U1 | 8 | #4 | 3 | 5'-8" | 30 |
| U2 | 4 | #4 | 3 | 6'-6" | 17 |
| U3 | 4 | #4 | 3 | 4'-0" | 11 |
| U4 | 4 | #4 | 3 | 8'-2" | 22 |
| U5 | 36 | #4 | 3 | 7'-2" | 172 |
| | | | | | |
| V1 | 36 | #11 | 4 | 13'-2" | 2518 |

REINFORCING STEEL 10895 LBS.

| | | | | | |
|---|---|---|---|---|---|
| SP-1 | 3 | * | 5 | 237'-8" | 744 |
| SP-2 | 3 | ** | 6 | 270'-7" | 542 |

SPIRAL COLUMN REINFORCING STEEL 1286 LBS.

* THE SP-1 SPIRAL REINFORCING STEEL SHALL BE W31 OR D-31 COLD DRAWN WIRE OR #5 PLAIN OR DEFORMED BAR

** THE SP-2 SPIRAL REINFORCING STEEL SHALL BE W20 OR D-20 COLD DRAWN WIRE OR #4 PLAIN OR DEFORMED BAR

### CLASS A CONCRETE BREAKDOWN

| | |
|---|---|
| POUR #2 (COLUMNS) | 5.2 C.Y. |
| POUR #3 (CAP) | 16.7 C.Y. |
| POUR #4 (STEPPED CAP) | 3.4 C.Y. |
| TOTAL CLASS A CONCRETE | 25.3 C.Y. |

### DRILLED PIERS:

| | |
|---|---|
| DRILLED PIER CONCRETE POUR #1 (DRILLED PIERS) | 11.6 C.Y. |
| 3'-0" Ø DRILLED PIER IN SOIL | 18.3 LIN. FT. |
| 3'-0" Ø DRILLED PIER NOT IN SOIL | 26.0 LIN. FT. |
| PERMANENT STEEL CASING FOR 3'-0" Ø DRILLED PIER | 15.0 LIN. FT. |
| CSL TUBES | 195 LIN. FT. |

PROJECT NO. 17BP.8.R.70

RANDOLPH COUNTY

STATION: 13+72.50 -L-

SHEET 2 OF 2

STATE OF NORTH CAROLINA
DEPARTMENT OF TRANSPORTATION
RALEIGH

SUBSTRUCTURE

BENT No. 1

NORTH CAROLINA PROFESSIONAL SEAL 24939 ENGINEER BYRON E. ATKINSON
7/26/2017

**DOCUMENT NOT CONSIDERED FINAL UNLESS ALL SIGNATURES COMPLETED**

MI ENGINEERING
1011 SCHAUB DRIVE, SUITE 100
RALEIGH, NC 27606
(919) 851-6606
FIRM PE NUMBER : P-0671

| REVISIONS | | | | | | SHEET NO. |
|---|---|---|---|---|---|---|
| NO. | BY: | DATE: | NO. | BY: | DATE: | S-22 |
| 1 | | | 3 | | | TOTAL SHEETS |
| 2 | | | 4 | | | 26 |

| | | | |
|---|---|---|---|
| DRAWN BY : | B.E. LANNING | DATE : | 07/17 |
| CHECKED BY : | B.E. ATKINSON | DATE : | 07/17 |
| DESIGN ENGINEER OF RECORD : | B.E. ATKINSON | DATE : | 07/17 |

7/26/2017
3:06:16 PM
User: blanning
Filename: P:\NC Bridges\2013 Archive\MI3010 - Div 08 Bridge Replacements_CH Engr\MI3010.04_Randolph 212\17BP8R70\Structures\401_043_17BP8R70_SD_BIB.dgn

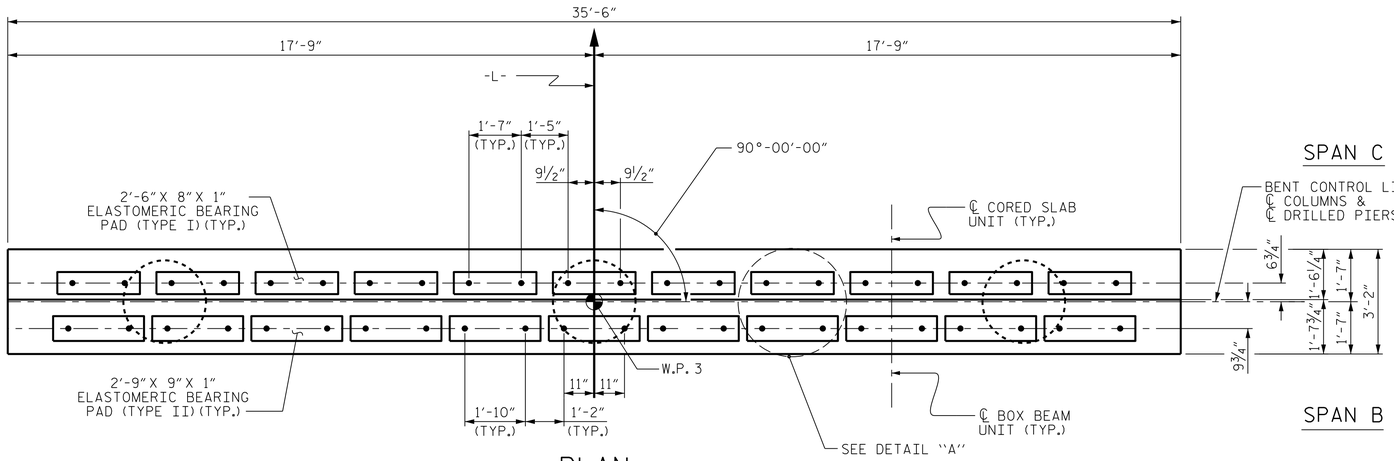


## PLAN

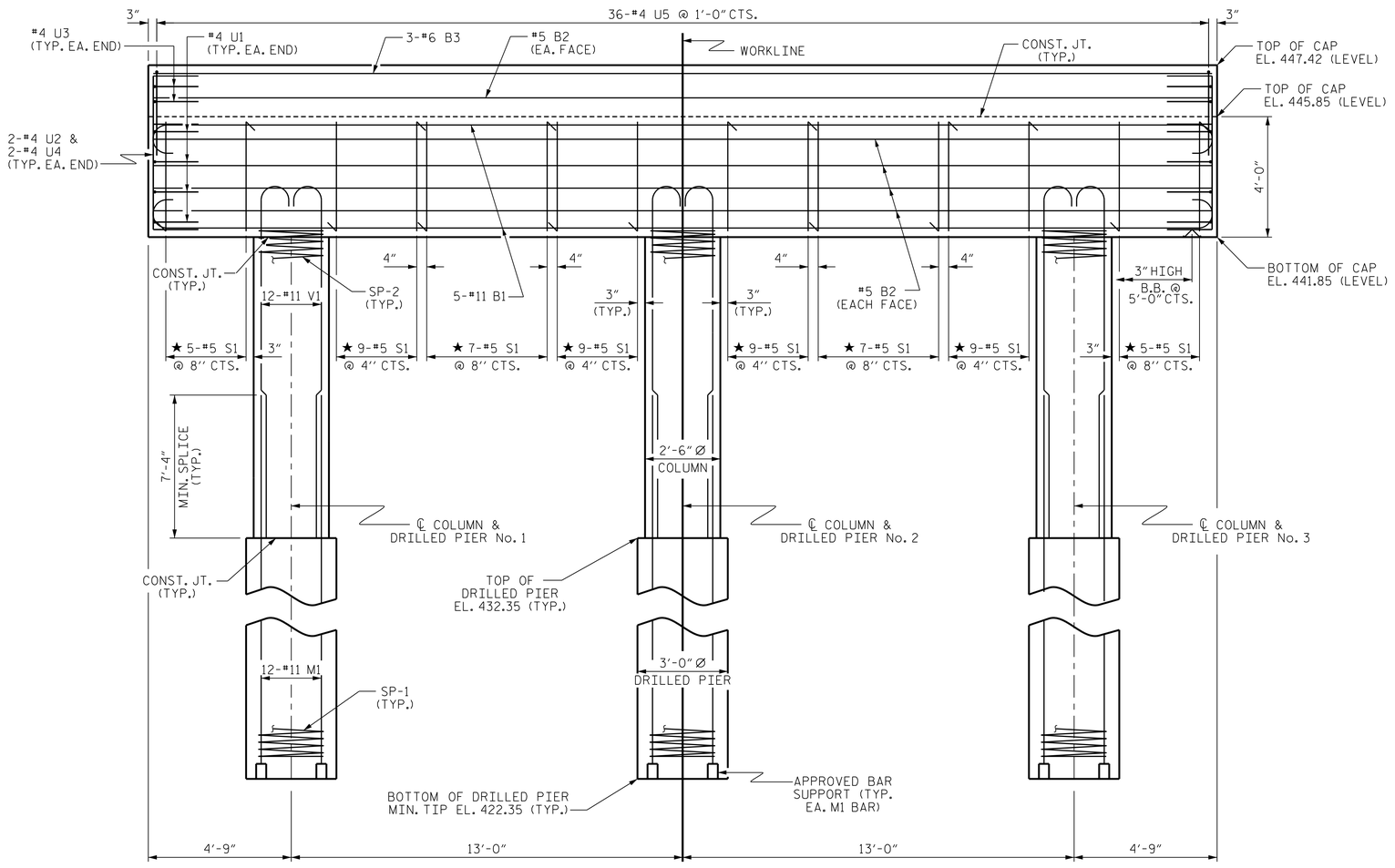


## ELEVATION

DIMENSIONS & REINFORCING STEEL ARE TYPICAL FOR EACH COLUMN & DRILLED PIER UNLESS OTHERWISE NOTED.

## NOTES

STIRRUPS AND "U" BARS IN CAP MAY BE SHIFTED AS NECESSARY TO CLEAR DOWELS.

HOOKS ON "V" BARS MAY BE TURNED AS NECESSARY FOR PLACING REINFORCING STEEL.

ALL STEEL IN THE DRILLED PIERS IS INCLUDED IN THE PAY ITEMS FOR "REINFORCING STEEL" AND "SPIRAL COLUMN REINFORCING STEEL."

★ INVERT ALTERNATE STIRRUPS.

THE CONTRACTOR'S ATTENTION IS CALLED TO THE FACT THAT THE LONGITUDINAL REINFORCEMENT FOR DRILLED PIERS IS DETAILED WITH 3 FEET OF EXTRA LENGTH.

FOR DRILLED PIERS, SEE SECTION 411 OF THE STANDARD SPECIFICATIONS.

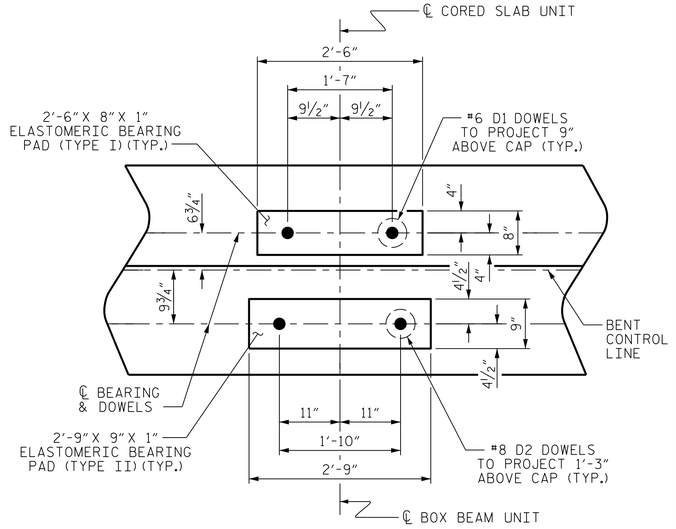


## DETAIL "A"

(DIMENSIONS ARE TYPICAL EACH BEARING)

PROJECT NO. 17BP.8.R.70

RANDOLPH COUNTY

STATION: 13+72.50 -L-

SHEET 1 OF 2

STATE OF NORTH CAROLINA
DEPARTMENT OF TRANSPORTATION
RALEIGH

SUBSTRUCTURE

BENT No. 2

NORTH CAROLINA PROFESSIONAL SEAL 24939 ENGINEER BYRON E. ATKINSON
7/26/2017

**DOCUMENT NOT CONSIDERED FINAL UNLESS ALL SIGNATURES COMPLETED**

MI ENGINEERING
1011 SCHAUB DRIVE, SUITE 100
RALEIGH, NC 27606
(919) 851-6606
FIRM PE NUMBER : P-0671

| REVISIONS | | | | | | SHEET NO. |
|---|---|---|---|---|---|---|
| NO. | BY: | DATE: | NO. | BY: | DATE: | S-23 |
| 1 | | | 3 | | | TOTAL SHEETS |
| 2 | | | 4 | | | 26 |

DRAWN BY : B.E. LANNING DATE : 07/17
CHECKED BY : B.E. ATKINSON DATE : 07/17
DESIGN ENGINEER OF RECORD : B.E. ATKINSON DATE : 07/17

7/26/2017
3:06:18 PM
User: blanning
Filename: P:\NC Bridges\2013 Archive\MI3010 - Div 08 Bridge Replacements_CH Engr\MI3010.04_Randolph 212\17BP8R70\Structures\401_045_17BP8R70_SD_B2A.dgn

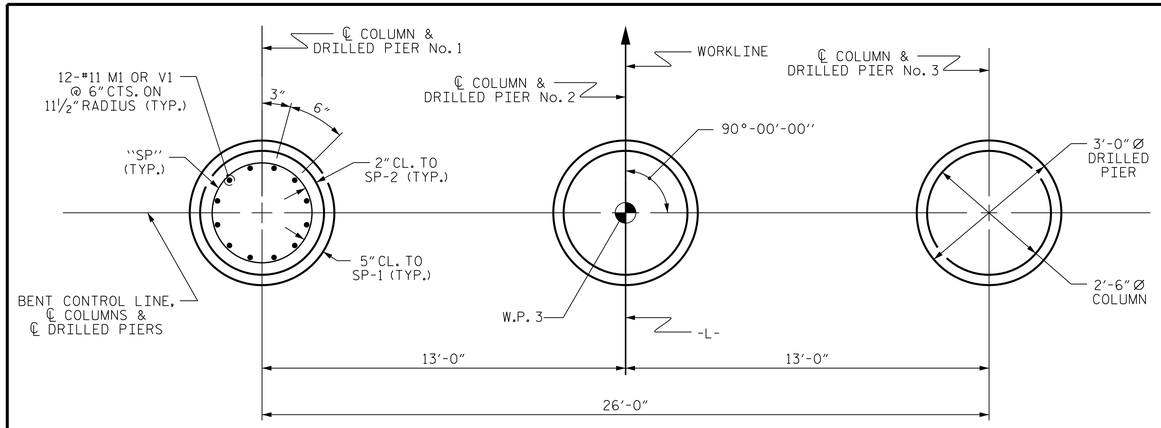


## PLAN OF DRILLED PIERS & COLUMNS

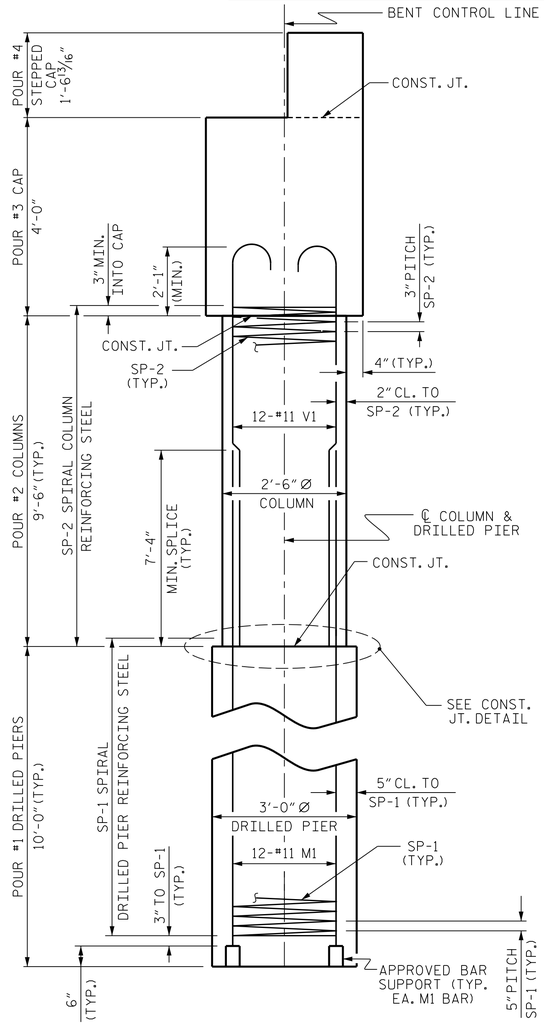


## END ELEVATION

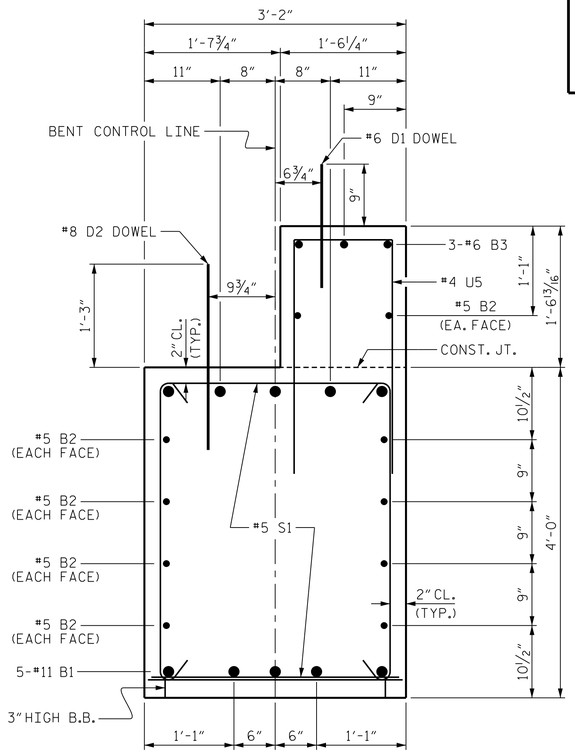


## SECTION THRU CAP

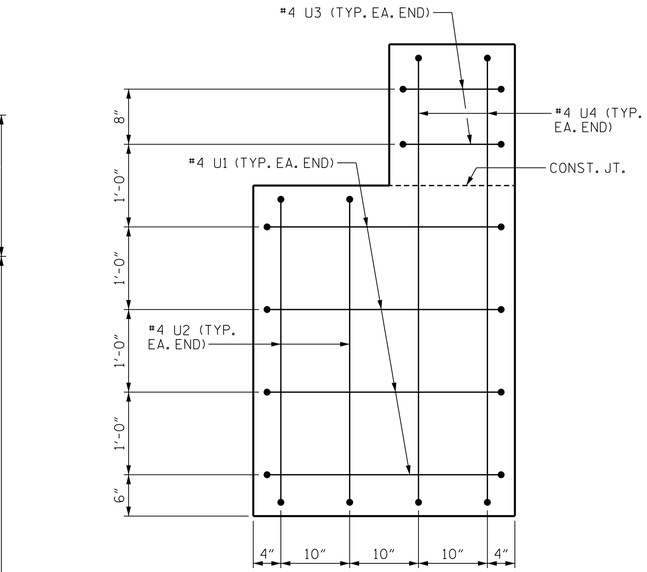


## END OF CAP VIEW

(TYPICAL BOTH ENDS)

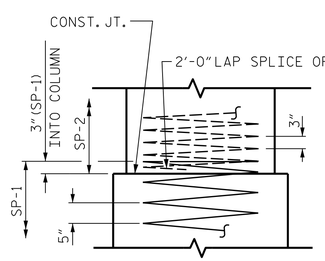


## CONSTRUCTION JOIT DETAIL

## BAR TYPES

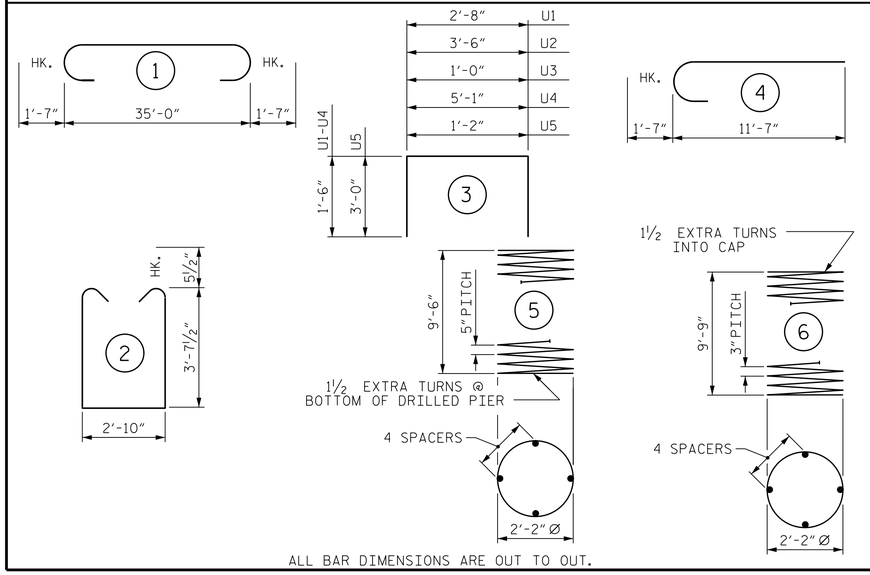


ALL BAR DIMENSIONS ARE OUT TO OUT.

## BILL OF MATERIAL

### BENT 2

| BAR | NO. | SIZE | TYPE | LENGTH | WEIGHT |
|---|---|---|---|---|---|
| B1 | 10 | #11 | 1 | 38'-2" | 2028 |
| B2 | 10 | #5 | STR | 35'-2" | 367 |
| B3 | 3 | #6 | STR | 35'-2" | 158 |
| | | | | | |
| D1 | 22 | #6 | STR | 1'-6" | 50 |
| D2 | 22 | #8 | STR | 2'-3" | 132 |
| | | | | | |
| M1 | 36 | #11 | STR | 19'-10" | 3793 |
| | | | | | |
| S1 | 60 | #5 | 2 | 11'-0" | 688 |
| | | | | | |
| U1 | 8 | #4 | 3 | 5'-8" | 30 |
| U2 | 4 | #4 | 3 | 6'-6" | 17 |
| U3 | 4 | #4 | 3 | 4'-0" | 11 |
| U4 | 4 | #4 | 3 | 8'-1" | 22 |
| U5 | 36 | #4 | 3 | 7'-2" | 172 |
| | | | | | |
| V1 | 36 | #11 | 4 | 13'-2" | 2518 |
| REINFORCING STEEL | | | | | 9986 LBS. |
| | | | | | |
| SP-1 | 3 | * | 5 | 161'-9" | 506 |
| SP-2 | 3 | ** | 6 | 270'-7" | 542 |
| SPIRAL COLUMN REINFORCING STEEL | | | | | 1048 LBS. |

* THE SP-1 SPIRAL REINFORCING STEEL SHALL BE W31 OR D-31 COLD DRAWN WIRE OR #5 PLAIN OR DEFORMED BAR

** THE SP-2 SPIRAL REINFORCING STEEL SHALL BE W20 OR D-20 COLD DRAWN WIRE OR #4 PLAIN OR DEFORMED BAR

### CLASS A CONCRETE BREAKDOWN

| | |
|---|---|
| POUR #2 (COLUMNS) | 5.2 C.Y. |
| POUR #3 (CAP) | 16.7 C.Y. |
| POUR #4 (STEPPED CAP) | 3.3 C.Y. |
| TOTAL CLASS A CONCRETE | 25.2 C.Y. |

### DRILLED PIERS:

| | |
|---|---|
| DRILLED PIER CONCRETE POUR #1 (DRILLED PIERS) | 7.9 C.Y. |
| 3'-0" Ø DRILLED PIER IN SOIL | 5.0 LIN. FT. |
| 3'-0" Ø DRILLED PIER NOT IN SOIL | 25.0 LIN. FT. |
| PERMANENT STEEL CASING FOR 3'-0" Ø DRILLED PIER | 6.8 LIN. FT. |
| CSL TUBES | 138 LIN. FT. |

PROJECT NO. 17BP.8.R.70

RANDOLPH COUNTY

STATION: 13+72.50 -L-

SHEET 2 OF 2

STATE OF NORTH CAROLINA
DEPARTMENT OF TRANSPORTATION
RALEIGH

SUBSTRUCTURE

BENT No. 2

NORTH CAROLINA PROFESSIONAL SEAL 24939 ENGINEER BYRON E. ATKINSON
7/26/2017

**DOCUMENT NOT CONSIDERED FINAL UNLESS ALL SIGNATURES COMPLETED**

MI ENGINEERING
1011 SCHAUB DRIVE, SUITE 100
RALEIGH, NC 27606
(919) 851-6606
FIRM PE NUMBER : P-0671

| REVISIONS | | | | | | SHEET NO. |
|---|---|---|---|---|---|---|
| NO. | BY: | DATE: | NO. | BY: | DATE: | S-24 |
| 1 | | | 3 | | | TOTAL SHEETS |
| 2 | | | 4 | | | 26 |

| | | | |
|---|---|---|---|
| DRAWN BY : | B.E. LANNING | DATE : | 07/17 |
| CHECKED BY : | B.E. ATKINSON | DATE : | 07/17 |
| DESIGN ENGINEER OF RECORD : | B.E. ATKINSON | DATE : | 07/17 |

7/26/2017
3:06:20 PM
User: blanning
Filename: P:\NC Bridges\2013 Archive\MI3010 - Div 08 Bridge Replacements_CH Engr\MI3010.04_Randolph 212\17BP8R70\Structures\401_047_17BP8R70_SD_B2B.dgn

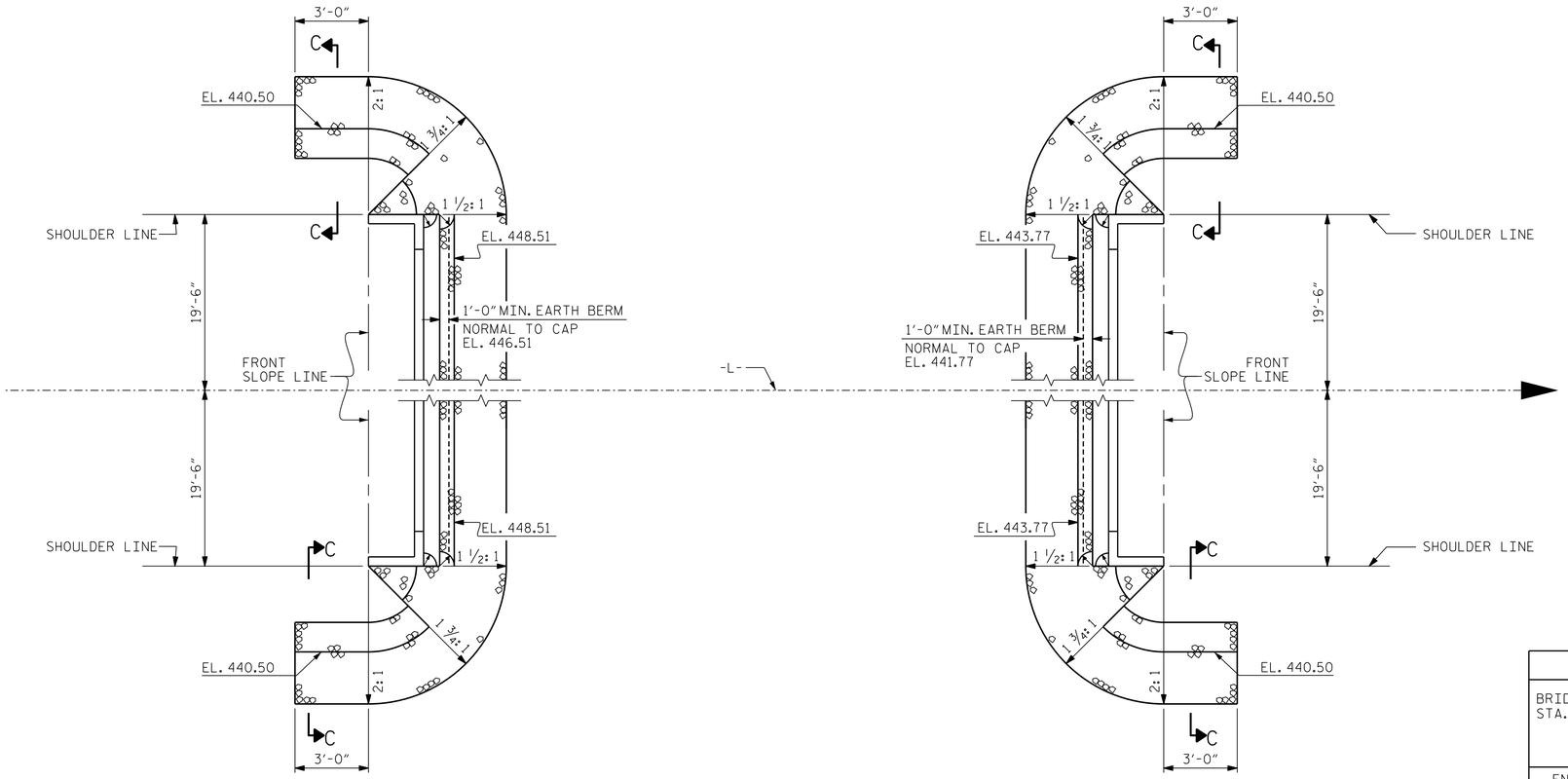


AT END BENT 1

AT END BENT 2

PLAN

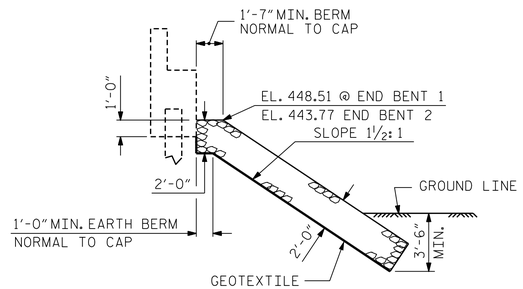


℄ SECTION
BERM RIP RAPPED

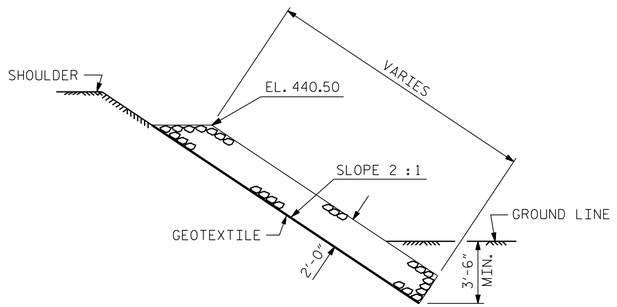


SECTION C-C

## ESTIMATED QUANTITIES

| BRIDGE @ STA. 13+72.50 -L- | RIP RAP CLASS II (2'-0" THICK) | GEOTEXTILE FOR DRAINAGE |
|---|---|---|
| | TONS | SQUARE YARDS |
| END BENT 1 | 111 | 123 |
| END BENT 2 | 249 | 277 |

PROJECT NO. 17BP.8.R.70
RANDOLPH COUNTY
STATION: 13+72.50 -L-

NORTH CAROLINA PROFESSIONAL ENGINEER SEAL 24939 ENGINEER BYRON E. ATKINSON
7/26/2017

**DOCUMENT NOT CONSIDERED FINAL UNLESS ALL SIGNATURES COMPLETED**

MI ENGINEERING
1011 SCHAUB DRIVE, SUITE 100
RALEIGH, NC 27606
(919) 851-6606
FIRM PE NUMBER : P-0671

STATE OF NORTH CAROLINA
DEPARTMENT OF TRANSPORTATION
RALEIGH
STANDARD

# RIP RAP DETAILS

| REVISIONS | | | | | | SHEET NO. |
|---|---|---|---|---|---|---|
| NO. | BY: | DATE: | NO. | BY: | DATE: | S-25 |
| 1 | | | 3 | | | TOTAL SHEETS |
| 2 | | | 4 | | | 26 |

| | | | |
|---|---|---|---|
| ASSEMBLED BY: | B.E. LANNING | DATE: | 07/17 |
| CHECKED BY : | B.E. ATKINSON | DATE: | 07/17 |
| DESIGN ENGINEER OF RECORD: | B.E. ATKINSON | DATE: | 07/17 |
| DRAWN BY : | REK 1/84 | REV. 5/1/06R | TLA/GM |
| CHECKED BY : | RDU 1/84 | REV. 10/1/11 | MAA/GM |
| | | REV. 12/21/11 | MAA/GM |

STD. NO. RR1 (Sht 2)

7/26/2017
3:06:22 PM
User: blanning
Filename: P:\NC Bridges\2013 Archive\MI3010 - Div 08 Bridge Replacements_CH Engr\MI3010.04_Randolph 212\17BP8R70\Structures\401_049_17BP8R70_SD_RR1.dgn

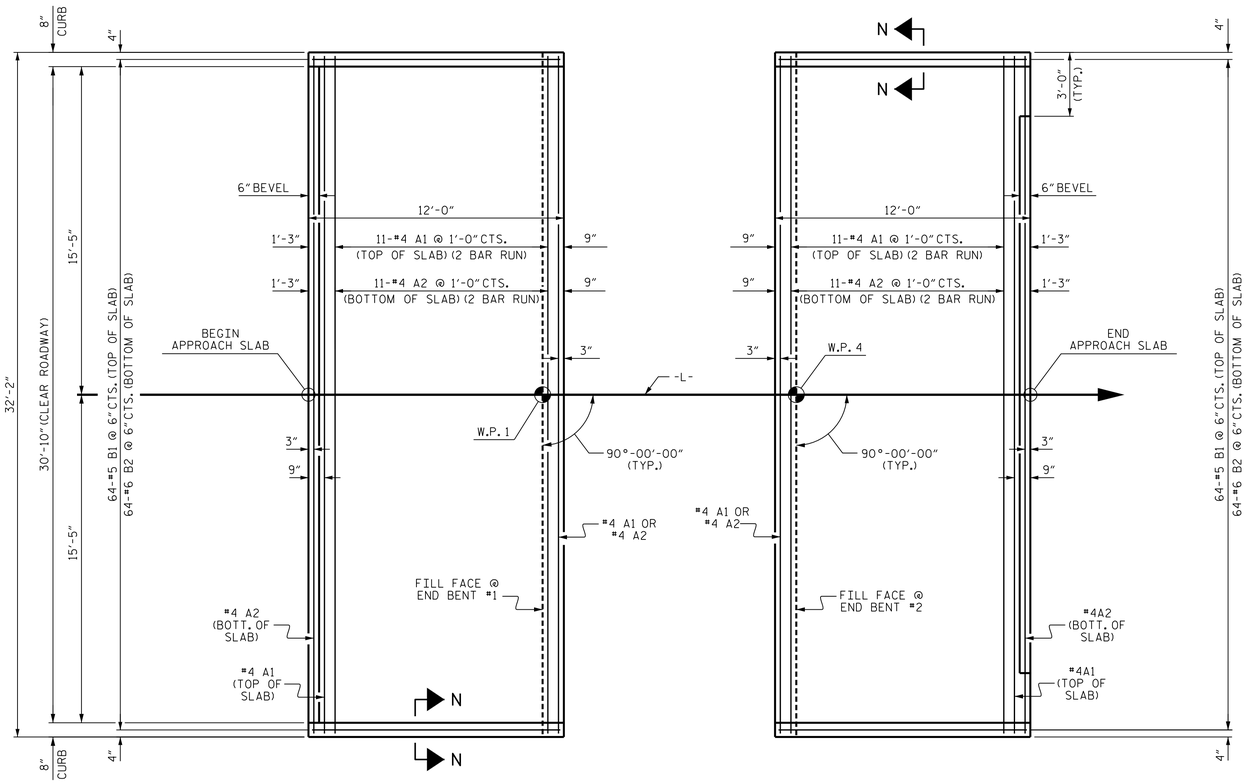


PLAN @ END BENT #1

PLAN @ END BENT #2

DIMENSIONS SHOWN ARE TYPICAL FOR BOTH APPROACH SLABS

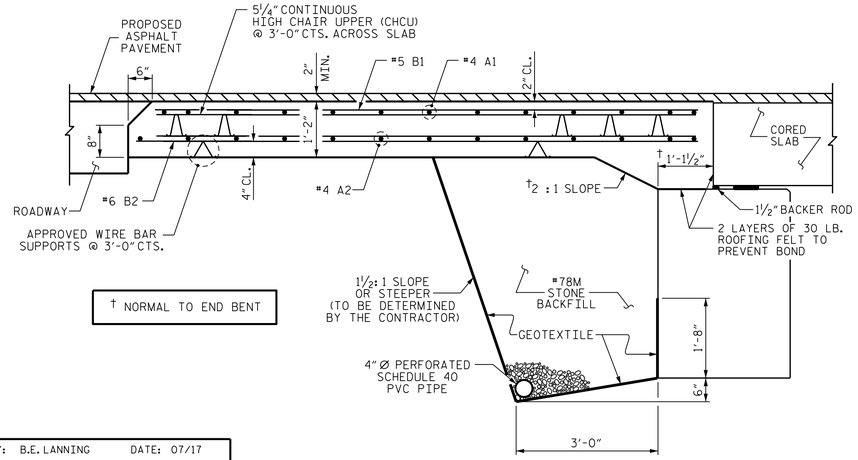


SECTION THRU SLAB

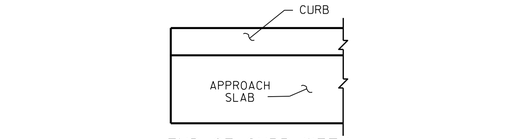


END OF CURB WITH SHOULDER BERM GUTTER

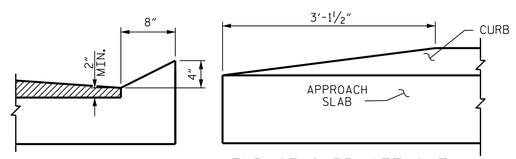


SECTION N-N

END OF CURB WITHOUT SHOULDER BERM GUTTER

CURB DETAILS

## NOTES

FOR BRIDGE APPROACH FILL INCLUDING GEOTEXTILE, 4" Ø DRAINAGE PIPE, AND #78M STONE BACKFILL, SEE ROADWAY PLANS.

GEOTEXTILE SHALL BE TYPE 1IN ACCORDANCE WITH THE STANDARD SPECIFICATIONS SECTION 1056.

#78M STONE BACKFILL (CLASS V SELECT MATERIAL) SHALL BE IN ACCORDANCE WITH STANDARD SPECIFICATIONS SECTION 1016.

#78M STONE BACKFILL IS TO BE CONTINUOUS ALONG FILL FACE OF BACKWALL FROM OUTSIDE EDGE TO OUTSIDE EDGE OF APPROACH SLAB.

FOR THE 4" Ø DRAINAGE PIPE OUTLET(S), SEE ROADWAY STANDARD DRAWINGS.

AREA BETWEEN THE WINGWALL AND APPROACH SLAB SHALL BE GRADED TO DRAIN THE WATER AWAY FROM THE FILL FACE OF THE BRIDGE AND SHALL BE PAVED. SEE ROADWAY PLANS.

APPROACH SLAB GROOVING IS NOT REQUIRED.

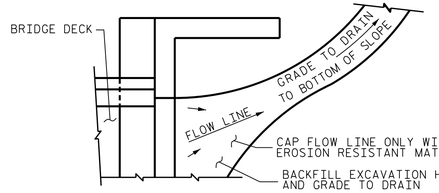


NOTE: IF THE APPROACH SLAB IS NOT CONSTRUCTED IMMEDIATELY AFTER THE BACKFILLING OF THE END BENT EXCAVATION, GRADE TO DRAIN TO THE BOTTOM OF THE SLOPE AND PROVIDE EROSION RESISTANT MATERIAL, SUCH AS FIBERGLASS ROVING OR AS DIRECTED BY THE ENGINEER TO PREVENT SOIL EROSION AND TO PROTECT THE AREA ADJACENT TO THE STRUCTURE. THE CONTRACTOR WILL BE REQUIRED TO REMOVE THESE MATERIALS PRIOR TO CONSTRUCTION OF THE APPROACH SLAB.

### TEMPORARY DRAINAGE DETAIL

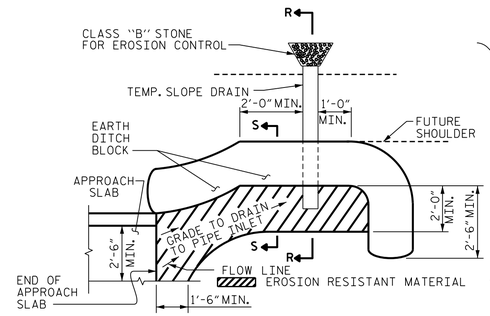


NOTE: IMMEDIATELY AFTER THE CONSTRUCTION OF THE APPROACH SLAB, THE CONTRACTOR SHALL PROVIDE TEMPORARY BERM AND SLOPE DRAIN. CONTRACTOR SHALL GRADE TO PIPE INLET AND PROVIDE EROSION RESISTANT MATERIAL AS SHOWN. THE EROSION RESISTANT MATERIAL SHALL BE EITHER 1) ASPHALT PLANT MIX, TYPE 1 OR TYPE 2, MIN. 2" DEPTH, 2) EROSION CONTROL MAT, OR 3) CONCRETE, AS DIRECTED BY THE ENGINEER. THE SLOPE DRAIN SHALL CONSIST OF A NON-PERFORATED TEMPORARY DRAINAGE PIPE, 12 INCHES IN DIAMETER.

PLAN VIEW

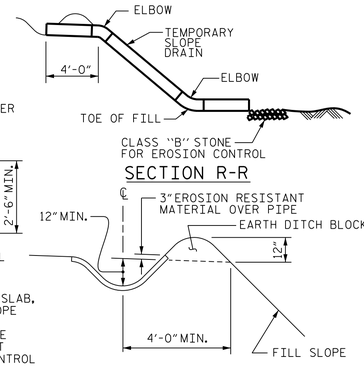


SECTION S-S

### TEMPORARY BERM AND SLOPE DRAIN DETAILS

(TO BE USED WHEN SHOULDER BERM GUTTER IS REQUIRED)

### BILL OF MATERIAL

APPROACH SLAB AT EB #1

| BAR | NO. | SIZE | TYPE | LENGTH | WEIGHT |
|---|---|---|---|---|---|
| * A1 | 26 | #4 | STR | 16'-11" | 294 |
| A2 | 26 | #4 | STR | 16'-9" | 291 |
| | | | | | |
| * B1 | 64 | #5 | STR | 11'-2" | 745 |
| B2 | 64 | #6 | STR | 11'-8" | 1121 |
| | | | | | |
| REINFORCING STEEL | | | | LBS. | 1412 |
| * EPOXY COATED REINFORCING STEEL | | | | LBS. | 1039 |
| | | | | | |
| CLASS AA CONCRETE | | | | C. Y. | 18.4 |

APPROACH SLAB AT EB #2

| BAR | NO. | SIZE | TYPE | LENGTH | WEIGHT |
|---|---|---|---|---|---|
| * A1 | 26 | #4 | STR | 16'-11" | 294 |
| A2 | 26 | #4 | STR | 16'-9" | 291 |
| | | | | | |
| * B1 | 64 | #5 | STR | 11'-2" | 745 |
| B2 | 64 | #6 | STR | 11'-8" | 1121 |
| | | | | | |
| REINFORCING STEEL | | | | LBS. | 1412 |
| * EPOXY COATED REINFORCING STEEL | | | | LBS. | 1039 |
| | | | | | |
| CLASS AA CONCRETE | | | | C. Y. | 18.4 |

### SPLICE LENGTHS

| BAR SIZE | EPOXY COATED | UNCOATED |
|---|---|---|
| #4 | 2'-0" | 1'-9" |
| #5 | 2'-6" | 2'-2" |
| #6 | 3'-10" | 2'-7" |

PROJECT NO. 17BP.8.R.70

RANDOLPH COUNTY

STATION: 13+72.50 -L-

NORTH CAROLINA PROFESSIONAL SEAL 24939 ENGINEER BYRON E. ATKINSON

7/26/2017

**DOCUMENT NOT CONSIDERED FINAL UNLESS ALL SIGNATURES COMPLETED**

MI ENGINEERING
1011 SCHAUB DRIVE, SUITE 100
RALEIGH, NC 27606
(919) 851-6606
FIRM PE NUMBER : P-0671

STATE OF NORTH CAROLINA
DEPARTMENT OF TRANSPORTATION
RALEIGH

# STANDARD BRIDGE APPROACH SLAB FOR PRESTRESSED CONCRETE CORED SLAB UNIT (SUB-REGIONAL TIER) 90° SKEW

| REVISIONS | | | | | | SHEET NO. |
|---|---|---|---|---|---|---|
| NO. | BY: | DATE: | NO. | BY: | DATE: | S-26 |
| 1 | | | 3 | | | TOTAL SHEETS |
| 2 | | | 4 | | | 26 |

| | | |
|---|---|---|
| ASSEMBLED BY: | B.E. LANNING | DATE: 07/17 |
| CHECKED BY : | B.E. ATKINSON | DATE: 07/17 |
| DESIGN ENGINEER OF RECORD: | B.E. ATKINSON | DATE: 07/17 |
| DRAWN BY : SHS/MAA 5-09 | REV. 9-15 | MAA/TMG |
| CHECKED BY : BCH 5-09 | | |

STD. NO. BAS_33_90S

7/26/2017
3:06:24 PM
User: blanning
Filename: P:\NC Bridges\2013 Archive\M13010 - Div 08 Bridge Replacements_CH Engr\M13010.04_Randolph 212\17BP8R70\Structures\401_051_17BP8R70_SD_BAS1.dgn

# STANDARD NOTES

## DESIGN DATA:

| | |
|---|---|
| SPECIFICATIONS | A.A.S.H.T.O. (CURRENT) |
| LIVE LOAD | SEE PLANS |
| IMPACT ALLOWANCE | SEE A.A.S.H.T.O. |
| STRESS IN EXTREME FIBER OF | |
| STRUCTURAL STEEL - AASHTO M270 GRADE 36 | 20,000 LBS. PER SQ. IN. |
| - AASHTO M270 GRADE 50W | 27,000 LBS. PER SQ. IN. |
| - AASHTO M270 GRADE 50 | 27,000 LBS. PER SQ. IN. |
| REINFORCING STEEL IN TENSION | |
| GRADE 60 | 24,000 LBS. PER SQ. IN. |
| CONCRETE IN COMPRESSION | 1,200 LBS. PER SQ. IN. |
| CONCRETE IN SHEAR | SEE A.A.S.H.T.O. |
| STRUCTURAL TIMBER - TREATED OR | |
| UNTREATED - EXTREME FIBER STRESS | 1,800 LBS. PER SQ. IN. |
| COMPRESSION PERPENDICULAR TO GRAIN OF TIMBER | 375 LBS. PER SQ. IN. |
| EQUIVALENT FLUID PRESSURE OF EARTH | 30 LBS. PER CU. FT. (MINIMUM) |

## MATERIAL AND WORKMANSHIP:

EXCEPT AS MAY OTHERWISE BE SPECIFIED ON PLANS OR IN THE SPECIAL PROVISIONS, ALL MATERIAL AND WORKMANSHIP SHALL BE IN ACCORDANCE WITH THE 2012 "STANDARD SPECIFICATIONS FOR ROADS AND STRUCTURES" OF THE N. C. DEPARTMENT OF TRANSPORTATION.

STEEL SHEET PILING FOR PERMANENT OR TEMPORARY APPLICATIONS SHALL BE HOT ROLLED.

## CONCRETE:

UNLESS OTHERWISE REQUIRED ON PLANS, CLASS A CONCRETE SHALL BE USED FOR ALL PORTIONS OF ALL STRUCTURES WITH THE EXCEPTION THAT: CLASS AA CONCRETE SHALL BE USED IN BRIDGE SUPERSTRUCTURES, ABUTMENT BACKWALLS, AND APPROACH SLABS; AND CLASS B CONCRETE SHALL BE USED FOR SLOPE PROTECTION AND RIP RAP.

## CONCRETE CHAMFERS:

UNLESS OTHERWISE NOTED ON THE PLANS, ALL EXPOSED CORNERS ON STRUCTURES SHALL BE CHAMFERED 3/4" WITH THE FOLLOWING EXCEPTIONS: TOP CORNERS OF CURBS MAY BE ROUNDED TO 1-1/2" RADIUS WHICH IS BUILT INTO CURB FORMS; CORNERS OF TRANSVERSE FLOOR EXPANSION JOINTS SHALL BE ROUNDED WITH A 1/4" FINISHING TOOL UNLESS OTHERWISE REQUIRED ON PLANS; AND CORNERS OF EXPANSION JOINTS IN THE ROADWAY FACES AND TOPS OF CURBS AND SIDEWALKS SHALL BE ROUNDED TO A 1/4" RADIUS WITH A FINISHING STONE OR TOOL UNLESS OTHERWISE REQUIRED ON PLANS.

## DOWELS:

DOWELS WHEN INDICATED ON PLANS AS FOR CULVERT EXTENSIONS, SHALL BE EMBEDDED AT LEAST 12" INTO THE OLD CONCRETE AND GROUTED INTO PLACE WITH 1:2 CEMENT MORTAR.

## ALLOWANCE FOR DEAD LOAD DEFLECTION, SETTLEMENT, ETC. IN CASTING SUPERSTRUCTURES:

BRIDGES SHALL BE BUILT ON THE GRADE OR VERTICAL CURVE SHOWN ON PLANS. SLABS, CURBS AND PARAPETS SHALL CONFORM TO THE GRADE OR CURVE.

ALL DIMENSIONS WHICH ARE GIVEN IN SECTION AND ARE AFFECTED BY DEAD LOAD DEFLECTIONS ARE DIMENSIONS AT CENTER LINE OF BEARING UNLESS OTHERWISE NOTED ON PLANS. IN SETTING FORMS FOR STEEL BEAM BRIDGES AND PRESTRESSED CONCRETE GIRDER BRIDGES, ADJUSTMENTS SHALL BE MADE DUE TO THE DEAD LOAD DEFLECTIONS FOR THE ELEVATIONS SHOWN. WHERE BLOCKS ARE SHOWN OVER BEAMS FOR BUILDING UP TO THE SLAB, THE VERTICAL DIMENSIONS OF THE BLOCKS SHALL BE ADJUSTED BETWEEN BEARINGS TO COMPENSATE FOR DEAD LOAD DEFLECTIONS, VERTICAL CURVE ORDINATE, AND ACTUAL BEAM CAMBER. WHERE BOTTOM OF SLAB IS IN LINE WITH BOTTOM OF TOP FLANGES, DEPTH OF SLAB BETWEEN BEARINGS SHALL BE ADJUSTED TO COMPENSATE FOR DEAD LOAD DEFLECTION, VERTICAL CURVE ORDINATE, AND ACTUAL BEAM CAMBER.

IN SETTING FALSEWORK AND FORMS FOR REINFORCED CONCRETE SPANS, AN ALLOWANCE SHALL BE MADE FOR DEAD LOAD DEFLECTIONS, SETTLEMENT OF FALSEWORK, AND PERMANENT CAMBER WHICH SHALL BE PROVIDED FOR IN ADDITION TO THE ELEVATIONS SHOWN. AFTER REMOVAL OF THE FALSEWORK, THE FINISHED STRUCTURES SHALL CONFORM TO THE PROFILE AND ELEVATIONS SHOWN ON THE PLANS AND CONSTRUCTION ELEVATIONS FURNISHED BY THE ENGINEER.

DETAILED DRAWINGS FOR FALSEWORK OR FORMS FOR BRIDGE SUPERSTRUCTURE AND ANY STRUCTURE OR PARTS OF A STRUCTURE AS NOTED ON THE PLANS SHALL BE SUBMITTED TO THE ENGINEER FOR APPROVAL BEFORE CONSTRUCTION OF THE FALSEWORK OR FORMS IS STARTED.

## REINFORCING STEEL:

ALL REINFORCING STEEL SHALL BE DEFORMED. DIMENSIONS RELATIVE TO PLACEMENT OF REINFORCING ARE TO CENTERS OF BARS UNLESS OTHERWISE INDICATED IN THE PLANS. DIMENSIONS ON BAR DETAILS ARE TO CENTERS OF BARS OR ARE OUT TO OUT AS INDICATED ON PLANS.

WIRE BAR SUPPORTS SHALL BE PROVIDED FOR REINFORCING STEEL WHERE INDICATED ON THE PLANS. WHEN BAR SUPPORT PIECES ARE PLACED IN CONTINUOUS LINES, THEY SHALL BE SO PLACED THAT THE ENDS OF THE SUPPORTING WIRES SHALL BE LAPPED TO LOCK LEGS ON ADJOINING PIECES.

## STRUCTURAL STEEL:

AT THE CONTRACTOR'S OPTION, HE MAY SUBSTITUTE 7/8" Ø SHEAR STUDS FOR THE 3/4" Ø STUDS SPECIFIED ON THE PLANS. THIS SUBSTITUTION SHALL BE MADE AT THE RATE OF 3 - 7/8" Ø STUDS FOR 4 - 3/4" Ø STUDS, AND STUD SPACING CHANGES SHALL BE MADE AS NECESSARY TO PROVIDE THE SAME EQUIVALENT NUMBER OF 7/8" Ø STUDS ALONG THE BEAM AS SHOWN FOR 3/4" Ø STUDS BASED ON THE RATIO OF 3 - 7/8" Ø STUDS FOR 4 - 3/4" Ø STUDS. STUDS OF THE LENGTH SPECIFIED ON THE PLANS MUST BE PROVIDED. THE MAXIMUM SPACING SHALL BE 2'-0".

EXCEPT AT THE INTERIOR SUPPORTS OF CONTINUOUS BEAMS WHERE THE COVER PLATE IS IN CONTACT WITH BEARING PLATE, THE CONTRACTOR MAY, AT HIS OPTION, SUBSTITUTE FOR THE COVER PLATES DESIGNATED ON THE PLANS COVER PLATES OF THE EQUIVALENT AREA PROVIDED THESE PLATES ARE AT LEAST 5/16" IN THICKNESS AND DO NOT EXCEED A WIDTH EQUAL TO THE FLANGE WIDTH LESS 2" OR A THICKNESS EQUAL TO 2 TIMES THE FLANGE THICKNESS. THE SIZE OF FILLET WELDS SHALL CONFORM TO THE REQUIREMENTS OF THE CURRENT ANSI/AASHTO/AWS "BRIDGE WELDING CODE". ELECTROSLAG WELDING WILL NOT BE PERMITTED.

WITH THE SOLE EXCEPTION OF EDGES AT SURFACES WHICH BEAR ON OTHER SURFACES, ALL SHARP EDGES AND ENDS OF SHAPES AND PLATES SHALL BE SLIGHTLY ROUNDED BY SUITABLE MEANS TO A RADIUS OF APPROXIMATELY 1/16 INCH OR EQUIVALENT FLAT SURFACE AT A SUITABLE ANGLE PRIOR TO PAINTING, GALVANIZING, OR METALLIZING.

## HANDRAILS AND POSTS:

METAL STANDARDS AND FACES OF THE CONCRETE END POSTS FOR THE METAL RAIL SHALL BE SET NORMAL TO THE GRADE OF THE CURB, UNLESS OTHERWISE SHOWN ON PLANS. THE METAL RAIL AND TOPS OF CONCRETE POSTS USED WITH THE ALUMINUM RAIL SHALL BE BUILT PARALLEL TO THE GRADE OF THE CURB.

METAL HANDRAILS SHALL BE IN ACCORDANCE WITH THE PLANS. RAILS SHALL BE AS MANUFACTURED FOR BRIDGE RAILING. CASTINGS SHALL BE OF A UNIFORM APPEARANCE. FINS AND OTHER DEFORMATIONS RESULTING FROM CASTING OR OTHERWISE SHALL BE REMOVED IN A MANNER SO THAT A UNIFORM COLORING OF THE COMPLETED CASTING SHALL BE OBTAINED. CASTINGS WITH DISCOLORATIONS OR OF NON-UNIFORM COLORING WILL NOT BE ACCEPTED. CERTIFIED MILL REPORTS ARE REQUIRED FOR METAL RAILS AND POSTS.

## SPECIAL NOTES:

GENERALLY, IN CASE OF DISCREPANCY, THIS STANDARD SHEET OF NOTES SHALL GOVERN OVER THE SPECIFICATIONS, BUT THE REMAINDER OF THE PLANS SHALL GOVERN OVER NOTES HEREON, AND SPECIAL PROVISIONS SHALL GOVERN OVER ALL. SEE SPECIFICATIONS ARTICLE 105-4.

REV. 6-16-95 EEM (W) RGW REV. 5-7-03 RWW (W) JTE REV. 10-1-11 MAA (W) GM
REV. 8-16-99 RWW (W) LES REV. 5-1-06 TLA (W) GM

ENGLISH

JANUARY, 1990

STD. NO. SN